OPERATING MANUAL
AUSTRALIA

This manual must be kept and stored with the aerial platform at all times.

SJIII Series

Operating Manual - AS

Compacts and Conventionals

Models 32xx, 46xx and 68xx

For Service please call ***800 275-9522***

Skyjack Service Center, 3451 Swenson Ave., St. Charles, IL. 60174, USA .... *FAX 630 262-0006*

For Parts in North America and Asia please call ***800 965-4626***

Skyjack Parts Center, 3451 Swenson Ave., St. Charles, IL. 60174, USA..... *FAX 888 782-4825*

For Parts & Service in Europe please call ***44-1691-676-235***

Skyjack Europe, Glovers Meadow, Maesbury Rd., Oswestry, Shropshire, U.K .....*FAX 44-1691-676-239*

143858AC-A Printed in Canada February 2008

OPERATING MANUAL
AUSTRALIA

This manual must be kept and stored with the aerial platform at all times.

The Compacts and Conventionals
Models 32xx, 46xx and 68xx

USE THE SERIAL NUMBER OF YOUR MACHINE TO DETERMINE THE CORRECT OPERATING MANUAL TO USE								
Manual Part #		118942AD	122882AJ	122908AE	129908AE	129939AD	143858AC	143882AB
Release Date		July 2003	July 2003	July 2003	July 2003	April 2006	February 2008	February 2008
MODEL	3015	150931 & Below	150932 to 151981	Not Used		Not Used	Not Used	Not Used
	3219	229632 & Below	229633 to 236285					
	3215	Not Used		151982 to 152099	152100 to 152169	152170 to 154002	10 000 001 to 10 000 402	10 000 403 & Above
	3219			236286 to 237573	237574 to 239691	244130 to 268399	22 000 001 to 22 013 837	22 013 838 & Above
	3220	611286 & Below	611287 to 613550	613551 to 615016	615017 to 615505	616430 to 620094	60 000 001 to 60 001 522	60 001 523 & Above
	3226	Not Used	27013 to 28042	28043 to 28047	270931 to 271776	271777 to 279956	27 000 001 to 27 004 499	27 004 500 & Above
			28048 to 28117	28118 to 270930				
	4620	66658 & Below	66659 to 66875	Not Used	66876 to 66889	710000 to 719126	70 000 001 to 70 004 719	70 004 720 & Above
	4626	706174 & Below	706175 to 709362		709363 to 709588			
	4632	Not Used			Not Used			
	4830/32	87564 & Below	87565 to 870780		870781 to 871159	Not Used	Not Used	Not Used
	6826	75578 & Below	75579 to 75618		75619	75620 to 75664	75 000 001 to 75 000 018	75 000 019 & Above
	6832	82573 & Below	82574 to 83066		83067 to 83100	83101 to 83311	80 000 001 to 80 000 112	80 000 113 & Above

60312AR-AS-R

SJIII Series

The Safety Alert Symbol identifies important safety messages on aerial platform, safety signs in manuals or elsewhere. When you see this symbol, be alert to the possibility of personal injury or death. Follow the instructions in the safety message.

This Safety Alert Symbol means attention!

Become alert! Your safety is involved.

DANGER

DANGER indicates an imminently hazardous situation which, if not avoided, will result in death or serious injury.

WARNING

WARNING indicates a potentially hazardous situation which, if not avoided, could result in death or serious injury.

CAUTION

CAUTION indicates a potentially hazardous situation which, if not avoided, may result in minor or moderate injury. It may also be used to alert against unsafe practices.

IMPORTANT

IMPORTANT indicates a procedure essential for safe operation and which, if not followed, may result in a malfunction or damage to the aerial platform.

Table of Contents

Section 1 - About Your Aerial Platform

Read and Heed

Aerial Platform Definition 7
Purpose of Equipment 7
Use of Equipment 7
Manual 7
Operator 7
Service Policy and Warranty 7
Optional Accessories 7
Scope of this Manual 7

Safety Rules

Operator Safety Reminders 8
Electrocution Hazard 8
Safety Precautions 9

Section 2 - Operation

2.1 General 13
- 2.1-1 Operator Qualifications 13
- 2.1-2 Operator's Responsibility for Maintenance 13
- 2.1-3 Maintenance and Inspection Schedule 13
- 2.1-4 Owner's Inspections 13

2.2 Major Components 14
2.3 Major Assemblies 15
- 2.3-1 Base 15
- 2.3-2 Lifting Mechanism 15
- 2.3-3 Platform 15

2.4 Serial Number Nameplate 15
2.5 Component Identification 16
- 2.5-1 Main Power Disconnect Switch 16
- 2.5-2 Tilt Alarm 16
- 2.5-3 Base Control Console 16
- 2.5-4 Electrical Panel 17
- 2.5-5 Brake System 17
- 2.5-6 Free-wheeling Valve 18
- 2.5-7 Battery Charger 18
- 2.5-8 Pothole Protection Device 18
- 2.5-9 Emergency Lowering System 19
- 2.5-10 Maintenance Support 19
- 2.5-11 Platform Control Console 20
- 2.5-12 Manual Storage Box 20
- 2.5-13 Folding Guardrail System 21
- 2.5-14 Lanyard Attachment Anchorage 21

2.6 Component Identification (Special Options) 22
- 2.6-1 Powered Extension Control Console (If Equipped) 22
- 2.6-2 1500W AC Inverter (If Equipped) 22
- 2.6-3 Motion Alarm (If Equipped) 22

Table of Contents

Section 2 - Operation (Continued)

2.7 Operator's Responsibility 23
2.8 Visual and Daily Maintenance Inspections 24
2.9 Function Tests....31
2.10 Start Operation 38
2.10-1 To Raise or Lower Platform Using Base Control Console....38
2.10-2 To Activate Platform Control Console....39
2.10-3 To Raise or Lower Platform Using Platform Control Console 39
2.10-4 To Drive Forward or Backward 40
2.10-5 To Steer 40
2.10-6 To Select Drive Torque (If Equipped)....40
2.10-7 To Extend/Retract Manual Extension Platform 41
2.10-8 To Extend/Retract Powered Extension Platform (If Equipped)....41
2.10-9 Electrical Inverter (If Equipped) 42
2.10-10 Shutdown Procedure 42
2.11 Guardrail Folding Procedure....43
2.12 Loading/Unloading....44
2.12-1 Lifting....44
2.12-2 Driving 45
2.13 Moving the Aerial Platform Through a Doorway....46
2.14 Winching and Towing Procedures 48
2.14-1 To Release Free-wheeling Valve 48
2.14-2 To Release Brakes Manually....49
2.14-2a Pin Brakes System....49
2.14-2b Disc Brakes System....49
2.15 Emergency Lowering Procedure 50
2.16 Maintenance Support Procedure....51
2.17 Battery Maintenance 52
2.17-1 Battery Service Procedures 52
2.17-2 Battery Charging Operation....52
2.18 Tables....56
2.19 Labels 65

List of Tables

Table 2.1 Standard and Optional Features 56
Table 2.2 Owner's Annual Inspection Record 57
Table 2.3 Specifications and Features....58
Table 2.4 Floor Loading Pressure....60
Table 2.5 Maximum Platform Capacities (Evenly Distributed) 62
Table 2.6 Maintenance and Inspection Schedule 63
Table 2.7 Operator's Checklist 64

SKYJACK is continuously improving and expanding product features on its equipment, therefore, specifications and dimensions are subject to change without notice.

Aerial Platform Definition
A mobile device that has an adjustable position platform supported from ground level by a structure.

Purpose of Equipment
The SKYJACK SJIII Compact and Conventional series aerial platforms are designed to transport and raise personnel, tools and materials to overhead work areas.

Use of Equipment
The aerial platform is a highly maneuverable, mobile work station. Lifting and driving must be on a flat, level, compacted surface.

Manual
The operating manual is considered a fundamental part of the aerial platform. It is a very important way to communicate necessary safety information to users and operators. A complete and legible copy of this manual must be kept in the provided weather-resistant storage compartment on the aerial platform at all times.

Operator
The operator must read and completely understand both this operating manual and the safety panel label located on the platform and all other warnings in this manual and on the aerial platform. Compare the labels on the aerial platform with the labels found within this manual. If any labels are damaged or missing, replace them immediately.

Service Policy and Warranty
SKYJACK warrants each new SJIII Series work platform to be free of defective parts and workmanship for the first 24 months. Any defective part will be replaced or repaired by your local SKYJACK dealer at no charge for parts or labor. Contact the SKYJACK Service Department for warranty statement extensions or exclusions.

Optional Accessories
The SKYJACK aerial platform is designed to accept a variety of optional accessories. These are listed under “Standard and Optional Features” in Table 2.1. Operating instructions for these options (if equipped) are located in Section 2 of this manual.

For non-standard components or systems, contact the SKYJACK Service Department at

☎ : 800 275-9522
🖷 : 630 262-0006

Include the model and serial number for each applicable aerial platform.

Scope of this Manual
a. This manual meets the AS 1418.10-1996 standard and applies to the AS version of the SJIII Series aerial platform models listed on Table 2-1.

WARNING

Failure to comply with your required responsibilities in the use and operation of the aerial platform could result in death or serious injury!

Operator Safety Reminders

A study conducted by St. Paul Travelers showed that most accidents are caused by the failure of the operator to follow simple and fundamental safety rules and precautions.

You, as a careful operator, are the best insurance against an accident. Therefore, proper usage of this aerial platform is mandatory. The following pages of this manual should be read and understood completely before operating the aerial platform.

Common sense dictates the use of protective clothing when working on or near machinery. Use appropriate safety devices to protect your eyes, ears, hands, feet and body.

Any modifications from the original design are strictly forbidden without written permission from SKYJACK.

Electrocution Hazard

This aerial platform is not electrically insulated. Maintain a Minimum Safe Approach Distance (MSAD) from energized power lines and parts as listed below. The operator **must allow** for the platform to sway, rock or sag. **This aerial platform does not provide protection from contact with or proximity to an electrically charged conductor.**

DO NOT USE THE AERIAL PLATFORM AS A GROUND FOR WELDING.
DO NOT OPERATE THE AERIAL PLATFORM DURING LIGHTNING OR STORMS.

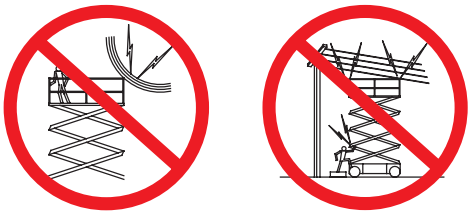

DANGER Avoid Power Lines
Minimum Safe Approach Distance
CE Guidance Note "Avoidance of danger from Overhead Lines"
Adhere strictly to the governmental rulings and regulations applicable in your country.
FAILURE TO AVOID THIS HAZARD WILL RESULT IN DEATH OR SERIOUS INJURY!

60023AC-CE

Safety Precautions

Know and understand the safety precautions before going on to next section.

WARNING

Failure to heed the following safety precautions could result in tip over, falling, crushing, or other hazards leading to death or serious injury.

- **KNOW** all national, state or territorial/provincial and local rules which apply to your aerial platform and jobsite.
- **TURN** the main power disconnect switch off when leaving the aerial platform unattended. Remove the key to prevent unauthorized use of the aerial platform.
- **WEAR** all the protective clothing and personal safety devices issued to you or called for by job conditions.
- **DO NOT** wear loose clothing, dangling neckties, scarves, rings, wristwatches or other jewelry while operating this lift.

- **AVOID** entanglement with ropes, cords or hoses.

- **AVOID** falling. Stay within the boundaries of the guardrails.

- **DO NOT** raise the aerial platform in windy or gusty conditions.

- **DO NOT** increase the lateral surface area of the platform. Increasing the area exposed to the wind will decrease aerial platform stability.

- **DO NOT** drive or elevate the aerial platform if it is not on a firm level surface. Do not drive elevated near depressions or holes of any type, loading docks, debris, drop-offs and surfaces that may affect the stability of the aerial platform.

- **If operation in areas with holes or drop-offs is absolutely necessary,** elevated driving shall not be allowed. Position the aerial platform horizontally only with the platform fully lowered. After ensuring that all 4 wheels or outriggers (if equipped) have contact with level firm surface, the aerial platform can be elevated. After elevation, the drive function must not be activated.

- **Elevated driving** must only be done on a firm level surface.

- **DO NOT** ascend or descend a grade when elevated. When fully lowered, ascending or descending, only grades up to rated maximum listed in Table 2-3a and Table 2-3b are permissible.

Safety Precautions (Continued)

Know and understand the safety precautions before going on to next section.

- **DO NOT** operate on surfaces not capable of holding the weight of the aerial platform including the rated load, e.g. covers, drains, and trenches.

- **DO NOT** operate an aerial platform that has ladders, scaffolding or other devices mounted on it to increase its size or work height. It is prohibited.

- **DO NOT** exert side forces on aerial platform while elevated.

- **DO NOT** use the aerial platform as a crane. It is prohibited.

- **DO NOT** sit, stand or climb on the guardrails. It is prohibited.

- **DO NOT** climb on scissor arm assembly. It is prohibited.

- **BE AWARE** of overhead obstructions or other possible hazards around the aerial platform when driving or lifting.

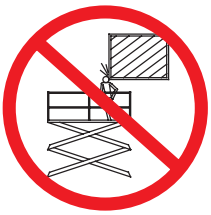

- **DO NOT** raise the aerial platform while the aerial platform is on a truck, fork lift or other device or vehicle.

- **BE AWARE** of crushing hazards. Keep all body parts inside platform guardrail.

- **DO NOT** lower the platform unless the area below is clear of personnel and obstructions.

- **ENSURE** that there are no personnel or obstructions in the path of travel, including blind spots.

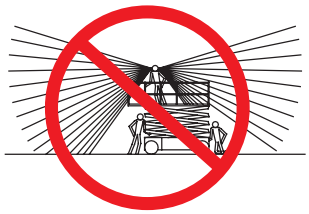

- **BE AWARE** of blind spots when operating the aerial platform.
- **STUNT** driving and horseplay are prohibited.
- **ENSURE ALL** tires are in good condition and lug nuts are properly tightened.
- **DO NOT** alter or disable limit switches or other safety devices.
- **DO NOT** use the aerial platform without guardrails, locking pins and the entry gate in place.

Safety Precautions (Continued)

Know and understand the safety precautions before going on to next section.

- **DO NOT** exceed the rated capacity of the aerial platform. Do make sure the load is evenly distributed on the platform.

- **DO NOT** attempt to free a snagged platform with lower controls until personnel are removed from the platform.

- **DO NOT** position the aerial platform against another object to steady the platform.

- **DO NOT** place materials on the guardrails or materials that exceed the confines of the guardrails unless approved by Skyjack.

WARNING

Entering and exiting the aerial platform should only be done using the three points of contact.

- Use only equipped access openings.
- Enter and exit only when the aerial platform is in the fully retracted position.

- Do use three points of contact to enter and exit the platform. Enter and exit the platform from the ground only. Face the aerial platform when entering or exiting the platform.

- Three points of contact means that two hands and one foot or one hand and two feet are in contact with the aerial platform or the ground at all times during entering and exiting.

WARNING

An operator should not use any aerial platform that:

- does not appear to be working properly.
- has been damaged or appears to have worn or missing parts.
- has alterations or modifications not approved by the manufacturer.
- has safety devices which have been altered or disabled.
- has been tagged or blocked out for non-use or repair.

Failure to avoid these hazards could result in death or serious injury.

Jobsite Inspection

- Do not use in hazardous locations.
- Perform a thorough jobsite inspection prior to operating the aerial platform, to identify potential hazards in your work area.
- Be aware of moving equipment in the area. Take appropriate actions to avoid collision.

2.0 Operation

This section provides the necessary information needed to operate the aerial platform. It is important that the user reads and understands this section before operating the aerial platform.

2.1 General

In order for this aerial platform to be in good working condition, it is important that the operator meets the necessary qualifications and follow the maintenance and inspection schedule referred to in this section.

2.1-1 Operator Qualifications

- Only trained and authorized personnel shall be permitted to operate an aerial platform.
- Safe use of this aerial platform requires the operator to understand the limitations and warnings, operating procedures and operator's responsibility for maintenance. Accordingly, the operator must understand and be familiar with this operating manual, its warnings and instructions, and all warnings and instructions on the aerial platform.
- The operator must be familiar with employer's work rules and related government regulations and be able to demonstrate the ability to understand and operate this make and model of aerial platform in the presence of a qualified person.

2.1-2 Operator's Responsibility for Maintenance

WARNING

Maintenance must be performed by trained and competent personnel who are familiar with mechanical procedures.

Death or serious injury could result from the use of an aerial platform that is not properly maintained or kept in good working condition.

- The operator must be sure that the aerial platform has been properly maintained and inspected before using it.
- The operator must perform all the daily inspections and function tests found in Table 2.6, even if the operator is not directly responsible for the maintenance of this aerial platform.

2.1-3 Maintenance and Inspection Schedule

- The inspection points covered in Table 2.6 indicate the areas of the aerial platform to be maintained or inspected and at what intervals the maintenance and inspections are to be performed.
- The actual operating environment of the aerial platform may affect the maintenance schedule.

WARNING

Use original or manufacturer-approved parts and components for the aerial platform.

2.1-4 Owner's Inspections

It is the responsibility of the owner to arrange daily, quarterly (or 150 hours) and annual inspections of the aerial platform. Refer to Table 2.6 for recommended maintenance and inspection areas and intervals. A record of annual inspection is kept on a label located on the scissor assembly. Refer to Table 2.2 in this manual.

2.2 Major Components

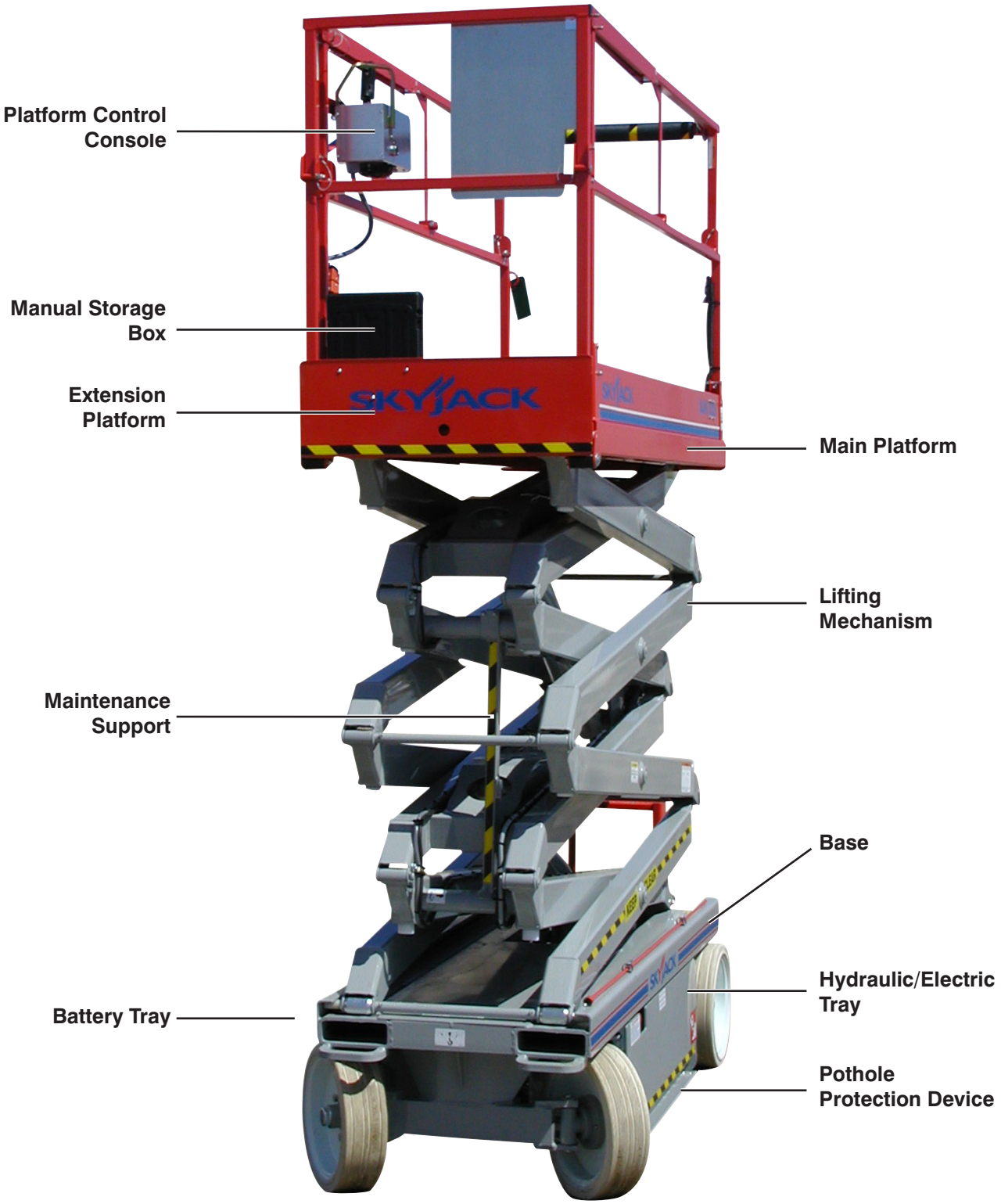

SKYJACK SJIII Series Aerial Platform

2.3 Major Assemblies

The aerial platform consists of three major assemblies: base, lifting mechanism and platform.

2.3-1 Base

The base is a rigid, one-piece weldment which supports two swing out trays.

Pothole Protection:
A mechanically actuated angle, located under the outside of the trays, rotates when lifting. This mechanism provides pothole protection for elevated driving (except models 6826 and 6832).

On Models 3215 and 3219 (Compacts):
One tray contains the hydraulic and electrical components. The other tray contains four (4) 6 volt batteries. The charger is located at the rear of the aerial platform. The front axle has two hydraulic motor-driven wheels, steerable by a hydraulic cylinder. The rear axle is fixed and has one spring-applied hydraulically released brake.

On Models 3220, 3226, 4620, 4626, 4632, 6826 and 6832 (Conventionals):
One tray contains the hydraulic and electrical components. The other tray contains battery charger and four (4) 6 volt batteries. The front axle has two non-driven wheels, steerable by a hydraulic cylinder. The rear axle has two hydraulic motor-driven wheels and two spring-applied hydraulically released brakes.

2.3-2 Lifting Mechanism

The lifting mechanism is constructed of formed steel or tube sections making up a scissor-type assembly. The scissor assembly is raised and lowered by single-acting hydraulic lift cylinders with holding valves. A two-section pump, driven by an electric motor, provides hydraulic power to the lift cylinders.

2.3-3 Platform

The platform is constructed of a tubular support frame, a skid-resistant “diamond plate” deck surface and 1100 mm hinged guardrails with 152 mm toe boards and mid-rails. The platform can be entered from the rear through a spring-returned gate with latch. The platform is also equipped with a manual extension platform.

2.4 Serial Number Nameplate

The serial number nameplate, located at the rear of the aerial platform, lists the following:

- Model number
- Serial number
- Aerial platform weight
- Maximum drivable height
- Maximum capacities
- Voltage
- System pressure
- Lift pressure
- Maximum platform height
- Maximum wheel load
- Maximum wind speed
- Maximum manual force
- Maximum incline
- Gradeability

2.5 Component Identification

The following descriptions are for identification, explanation and locating purposes only.

2.5-1 Main Power Disconnect Switch

This switch is located at the rear of the base.

Figure 2-1. Main Power Disconnect Switch

1. **Main Power Disconnect Switch** - This switch, when in off position, disconnects power to all circuits. Switch must be in on position to operate any circuit. Turn switch off when transporting aerial platform.

2.5-2 Tilt Alarm

The aerial platform is equipped with a device which senses when the aerial platform is out of level in any direction. When activated, it disables drive and lift functions of the aerial platform and an alarm produces an audible sound accompanied by the amber light. If the alarm sounds, lower the platform completely, then reposition aerial platform so that it is level before raising the platform.

NOTE

If the tilt alarm sounds and the platform does not, or only partially raises, immediately lower the platform completely and ensure that the aerial platform is on a firm level surface.

2.5-3 Base Control Console

This control console is located at the rear of the base. It contains the following controls:

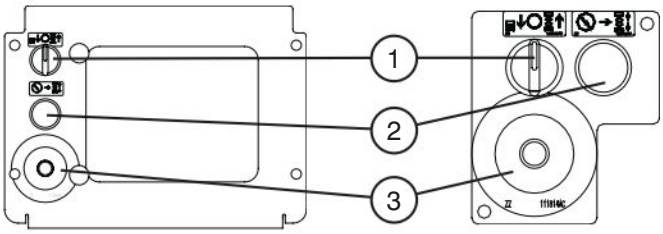

3215 & 3219 *3220, 3226 & 46xx*

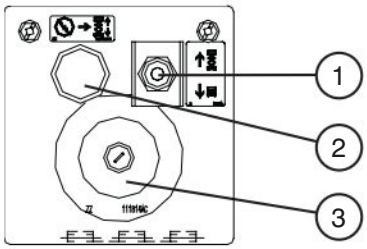

68xx

Figure 2-2. Base Control Box

1. **Platform Raise/Lower Switch** - This switch controls "↑" raising or "↓" lowering of platform.

2. **Enable Button** - This button, when depressed, brings power to platform raise/lower switch.

3. **Emergency Stop Button** - When depressed, this red "mushroom-head" pushbutton switch disconnects power to the control circuit.

2.5-4 Electrical Panel

This panel is located in the hydraulic/electric tray. It contains the following controls:

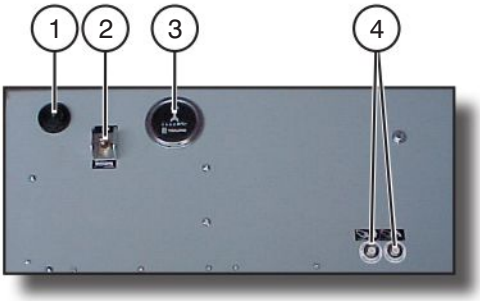

Figure 2-3. Electrical Panel

1. **Buzzer Alarm** - This audible pulse alarm will beep in varying intervals depending on the status of the platform**.**

2. **Platform Up/Down Toggle Switch** - This toggle type switch raises or lowers the platform to a desired height.

3. **Hourmeter** - This function activates when a function is selected.

4. **Circuit Breaker Resets** - In the event of power overload or positive circuit grounding, the circuit breaker pops out. Push the breaker back in to reset.

2.5-5 Brake System

The brake system is located at the rear of the base. The brakes must be manually disengaged before pushing, winching or towing. Refer to Section 2.14-2 for procedure on how to release brakes manually. The system contains the following controls:

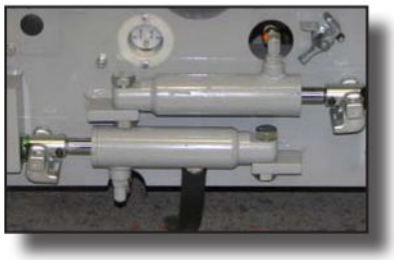

Pin Brakes (If Equipped)

Disc Brakes (If Equipped)

Figure 2-4. Brake System

1. Brake auto reset valve plunger
2. Brake hand pump

2.5-6 Free-wheeling Valve

Models 3215 and 3219

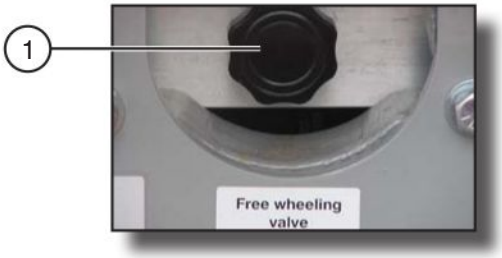

Models 3220, 3226, 46xx and 68xx

Figure 2-5. Free-wheeling Valve

1. **Free-wheeling Valve** - The free-wheeling valve is located at the front and/or rear of the aerial platform (depending on the model). Refer to Section 2.14-1 for procedure on how to release the free-wheeling valve.

2.5-7 Battery Charger

The charger is located at the rear of the base or inside the battery tray. Refer to Section 2.17-2 for battery charging operation.

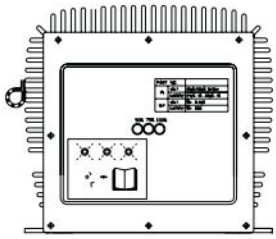

Figure 2-6. Battery Charger

2.5-8 Pothole Protection Device

Figure 2-7. Pothole Protection Device

1. **Pothole Protection Device** - This device consists of a set of mechanically actuated steel weldments located under the hydraulic/electric tray and battery tray. These weldments will automatically rotate for reduced ground clearance when elevating the aerial platform. If the pothole protection device has not fully lowered, the drive function will be disabled.

WARNING

Crushing Hazard - Personnel on ground must stay clear of pothole protection device.

WARNING

Do not drive elevated in areas where electrical cords or debris are in the path of travel.

Maintenance of the Pothole Protection Device

As with all safety devices, periodic inspection and maintenance is required to ensure the proper operation of the pothole protection device. This mechanism is designed to reduce ground clearance and assist in the stability of an elevated aerial platform in the event the aerial platform encounters a “drop-off” or “pothole.” The nature of this safety feature relies on maintaining a consistent ground clearance, therefore, if the aerial platform ever does come to rest on the pothole device, the platform should be immediately lowered and “locked out” to prevent further use until a complete inspection of the mechanism is performed by a qualified technician.

2.5-9 Emergency Lowering System

This emergency lowering system allows platform lowering in the event of an emergency or an electrical system failure. Refer to Section 2.15 for the emergency lowering procedure. The system contains the following controls:

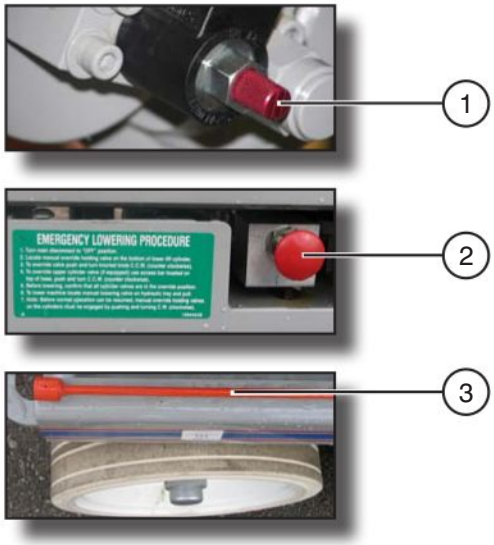

Figure 2-8. Emergency Lowering System

1. **Holding Valve Manual Override Knob** - Located on the holding valve at the bottom of each lift cylinder.

2. **Emergency Lowering Valve** - Located at the rear of the hydraulic/electric tray.

3. **Emergency Lowering Access Rod** (3226, 4626, 4632 & 68xx) - Located at the left side of the base.

2.5-10 Maintenance Support

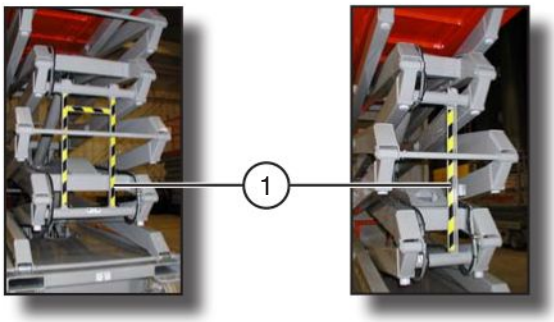

Figure 2-9. Maintenance Support

1. **Maintenance Support** - The maintenance support is a safety mechanism designed to support the scissor assembly. When properly positioned it can support the scissor assembly and empty platform. The maintenance support must be used when inspection and/or maintenance is to be performed within the lifting mechanism. Refer to Section 2.16 for procedure on how use and store the maintenance support.

WARNING

The maintenance support must be used when inspection and/or maintenance or repairs are to be performed within the lifting mechanism. Failure to use this safety mechanism could result in death or serious injury.

WARNING

Do not reach through the scissor assembly when the platform is raised without the maintenance support properly positioned. Failure to avoid this hazard could result in death or serious injury.

2.5-11 Platform Control Console

This removable control console is mounted at the right front of the platform. It contains the following controls:

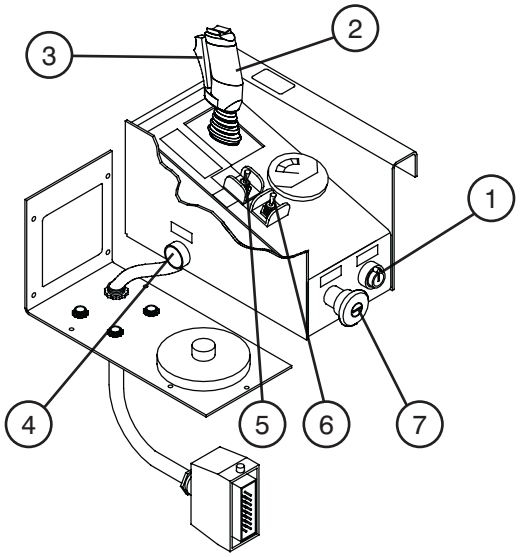

Figure 2-10. Platform Control Console

1. **Off/On Key Switch** - This switch disconnects or energizes the control circuit in the platform control console.

2. **Lift/Drive/Steer Controller** - This one-hand lever controls lift/drive and steer motions. Internal springs return it to neutral when controller is released.

3. **Lift/Drive/Steer Enable Trigger Switch** - This momentary "" switch energizes the controller. It must be held depressed continuously while engaging either the lift/drive or steer functions.

4. **Horn Pushbutton** - This "" pushbutton sounds an automotive-type horn.

5. **High/Low Torque Switch (If Equipped)** - This switch selects "" high torque (low speed) or "" low torque (high speed).

6. **Lift/Off/Drive Switch (If Equipped)** - Selecting "" off position disconnects power from both lift and drive circuits. Selecting "" lift position energizes the lift circuit. Selecting "" drive position energizes the drive circuit.

7. **Emergency Stop Button** - This button "", when depressed, disconnects power to the control circuit.

2.5-12 Manual Storage Box

This weather-resistant box is mounted on the platform railings. It contains operating manual and other important documentation. The operating manual for this make and model of aerial platform must remain with the aerial platform and should be stored in this box.

2.5-13 Folding Guardrail System

This system, when folded down, reduces the height of the retracted aerial platform for transporting and traveling through doorways only. Refer to Section 2.11 for guardrail folding procedure.

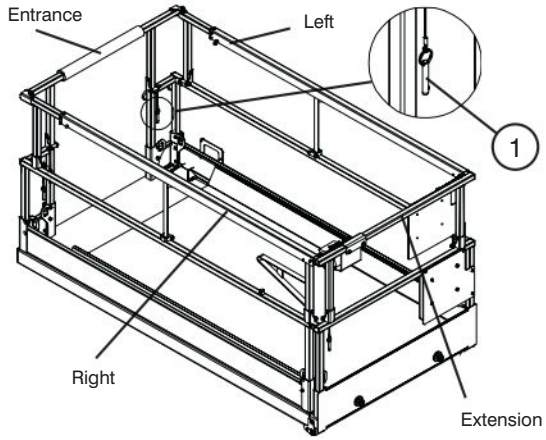

Figure 2-11. Folding Guardrail System

1. **Guardrail Locking Pin with Lanyard** - This pin is used to lock the guardrail in place.

WARNING

The scissor assembly must be fully lowered before raising or lowering the guardrails.

2.5-14 Lanyard Attachment Anchorage

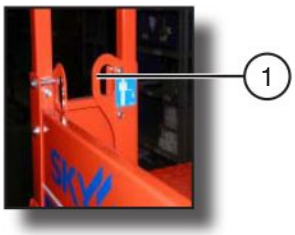

Figure 2-12. Lanyard Attachment Anchorage

1. **Lanyard Attachment Anchorage** - Use this as an attachment point for safety belt/harness tethers. Do not attach belts/harnesses to any other point on the platform. Do not use this point to lift, anchor, secure or support the platform or any other apparatus or material.

WARNING

The lanyard attachment anchorage is used for travel restraint, within the limits of the platform only. It is not a fall arresting device! Use as such could result in death or serious injury.

2.6 Component Identification (Special Options)

This section describes the components that are optional to aerial platforms.

2.6-1 Powered Extension Control Console (If Equipped)

This control console is mounted on one of the extension platform guardrails. It contains the following controls:

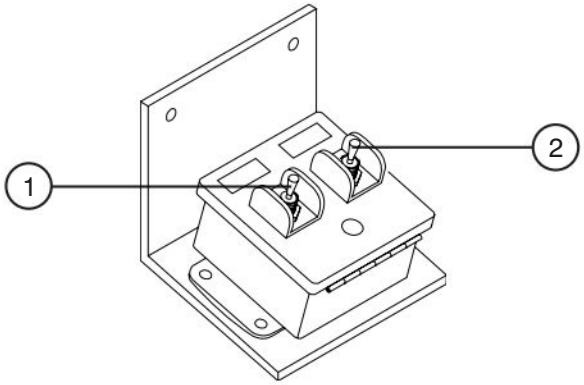

Figure 2-13. Powered Extension Control Console

1. **Enable Switch** - This switch, when activated and held, allows the extension platform extend/retract switch functions to operate.

2. **Extend/Retract Switch** - This switch, when activated, "" extends or "" retracts the powered extension platform. Refer to Section 2.10-9 on how to extend/retract the powered extension platform.

2.6-2 1500W AC Inverter (If Equipped)

The inverter is located on the base of the aerial platform. It has the following controls:

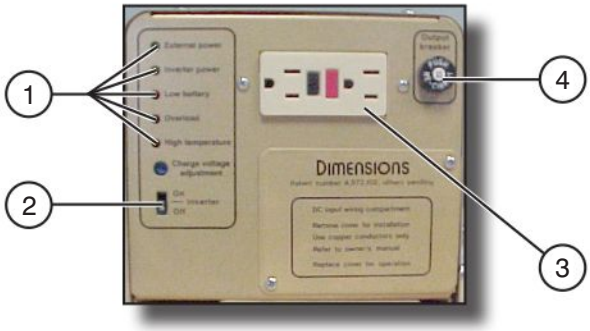

Figure 2-14. 1500W AC Inverter

NOTE

The inverter operation is automatic. These controls do not need to be manipulated for normal operation.

1. **Status LEDs** - These LEDs indicate the operating or fault status of the inverter.

2. **On/Off Switch** - This diagnostic slide switch activates or terminates inverter operation. It should remain in on position.

3. **GFCI Outlet** - During inverter operation, this outlet provides AC power.

4. **15 Amp Circuit Breaker** - In the event of a power overload or circuit grounding, the circuit breaker pops out. Press the breaker back in to reset.

2.6-3 Motion Alarm (If Equipped)

The alarm produces an audible sound when any control function is selected. On aerial platforms with certain options, a flashing amber light will accompany this alarm.

2.7 Operator's Responsibility

It is the responsibility of the operator, prior to each work shift, to perform the following:

1. Visual and Daily Maintenance Inspections

- are designed to discover any damage of components before the aerial platform is put into service.
- are done before the operator performs the function tests.

WARNING

Failure to locate and repair damage, and discover loose or missing parts may result in an unsafe operating condition.

2. Function Tests

- are designed to discover any malfunctions before the aerial platform is put into service.

IMPORTANT

The operator must understand and follow the step-by-step instructions to test all aerial platform functions.

The operator should make a copy of the Operator's Checklist (see Table 2.7) and fill out the visual and daily maintenance inspections and the function tests sections while performing the items outlined in Section 2.8 and Section 2.9.

IMPORTANT

If aerial platform is damaged or any unauthorized variation from factory-delivered condition is discovered, aerial platform must be tagged and removed from service.

Repairs to the aerial platform may only be made by a qualified service technician. After repairs are completed, the operator must perform visual and daily maintenance inspections & function tests again.

Scheduled maintenance inspections shall only be performed by qualified service technician (see Table 2.6).

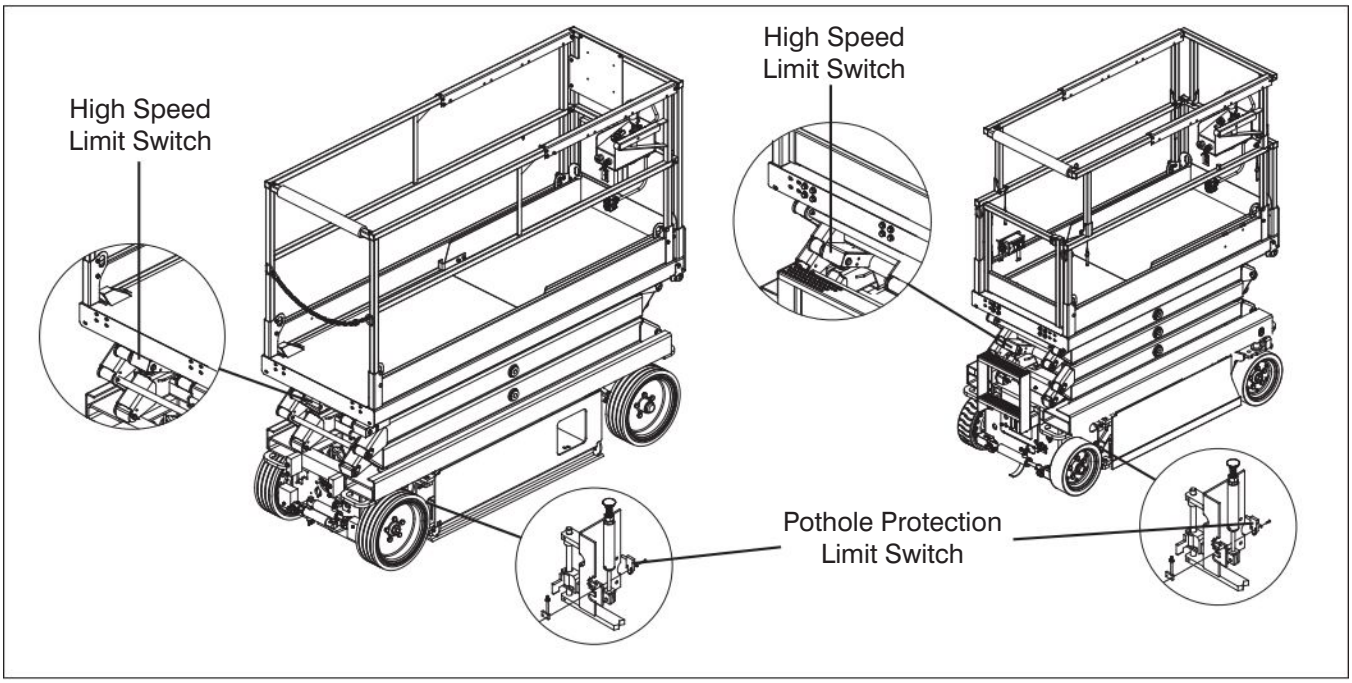

2.8 Visual & Daily Maintenance Inspections

Begin the visual and daily maintenance inspections by checking each item in sequence for the conditions listed in this section.

WARNING

To avoid injury, do not operate an aerial platform until all malfunctions have been corrected.

WARNING

To avoid possible injury, ensure aerial platform power is off during your visual and daily maintenance inspections.

NOTE

While doing visual and daily inspections in different areas, be aware to also inspect limit switches, electrical and hydraulic components.

2.8-1 Labels

Refer to the labels section in this manual and determine that all labels are in place and are legible.

2.8-2 Electrical

Maintaining the electrical components is essential to good performance and service life of the aerial platform.

Inspect the following areas for chafed, corroded and loose wires:

- base to platform cables and wiring harness
- battery tray wiring harnesses
- hydraulic/electrical wiring harnesses

2.8-3 Limit Switches

Ensure limit switches are properly secured with no signs of visible damage and movement is not obstructed.

2.8-4 Hydraulic

Maintaining the hydraulic components is essential to good performance and service life of the aerial platform.

Perform a visual inspection around the following areas:

- hoses and fittings
- all hydraulic cylinders
- all hydraulic manifolds
- the underside of the base
- ground area under the aerial platform

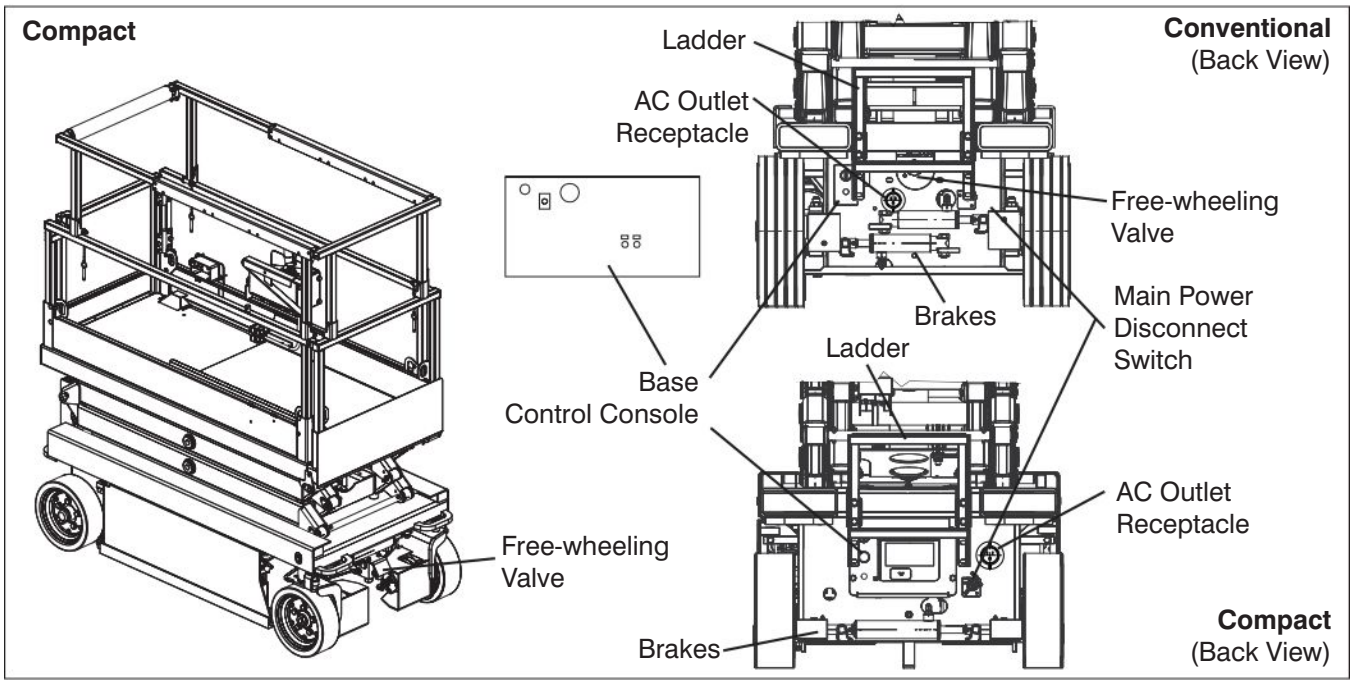

2.8-5 Entrance Side

- **Main Power Disconnect Switch**
  - Turn main power disconnect switch to off position.
  - Ensure all cables are secure and switch is in proper working condition.
- **Base Control Switches**
  - Ensure there are no signs of visible damage and all switches are in their neutral positions.
- **Free-wheeling Valve Knob**
  (Compacts - Front Side)
  - Ensure there are no loose or missing parts and there is no visible damage.
- **Brakes**
  - Ensure there are no loose or missing parts and there is no visible damage.
  - Ensure tabs are not locked.
- **AC Outlet Receptacle**
  - Ensure receptacle is free from dirt and obstructions.
- **Ladder**
  - Ensure there are no loose or missing parts and there is no visible damage.

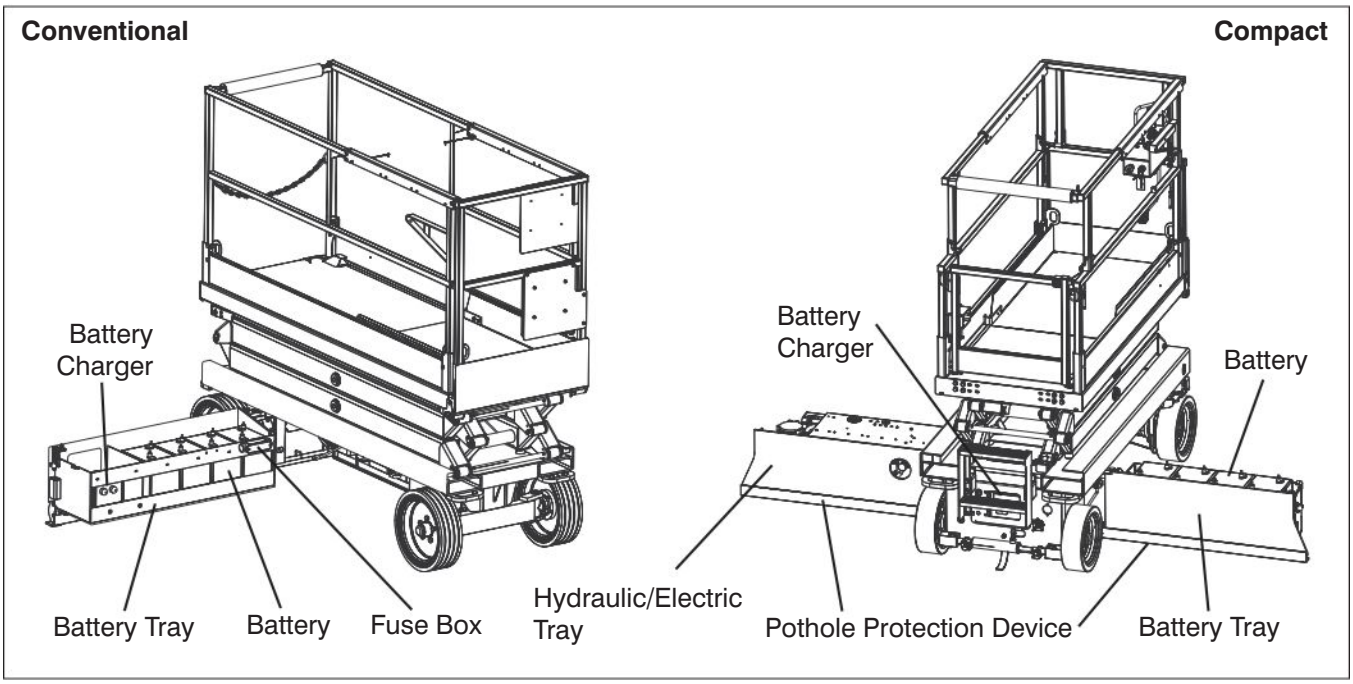

2.8-6 Battery Tray Side

- **Pothole Protection Device**
  - Ensure mechanisms have no sign of visible damage and are free from dirt and obstructions.
- **Battery Tray**
  - Ensure tray latch is secure and in proper working order.
- **Battery Charger**
  (Compacts - Entrance Side)
  - Ensure charger is secure and shows no visible damage.
- **Battery**
  Proper battery condition is essential to good performance and operational safety. Improper fluid levels or damaged cables and connections can result in component damage and hazardous conditions.

WARNING

Explosion hazard. Keep flames and sparks away. Do not smoke near batteries.

WARNING

Battery acid is extremely corrosive - Wear proper eye and facial protection as well as appropriate protective clothing. If contact occurs, immediately flush with cold water and seek medical attention.

1. Check battery case for damage.
2. Clean battery terminals and cable ends thoroughly with a terminal cleaning tool or wire brush.
3. Ensure all battery connections are tight.
4. If applicable, check battery fluid level. If plates are not covered by at least 13 mm of solution, add distilled or demineralized water.
5. Replace battery if damaged or incapable of holding a lasting charge.

WARNING

Use original or manufacturer-approved parts and components for the aerial platform.

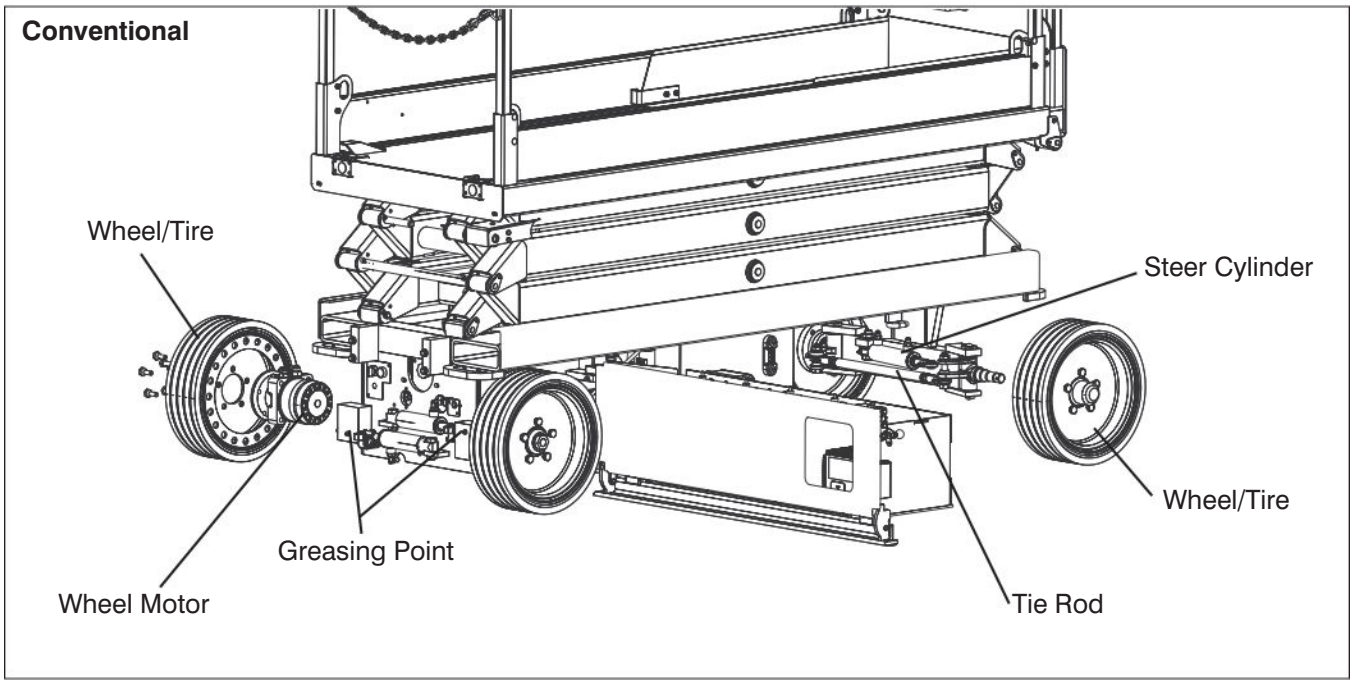

- **Steer Cylinder Assembly**
  - Ensure steer cylinder assembly is properly secured and there are no loose or missing parts.
- **Wheel/Tire Assembly**
  The aerial platform is either equipped with solid rubber tires or foam-filled tires. Tire and/or wheel failure could result in an aerial platform tip-over. Component damage may also result if problems are not discovered and repaired in a timely fashion.
  - Check all tire treads and sidewalls for cuts, cracks, punctures and unusual wear.
  - Check each wheel for damage and cracked welds.
  - Check each lug nut for proper torque to ensure none are loose.
  - Check wheel motor assembly for loose or missing parts and signs of visible damage.
  - Ensure wheels are aligned and true vertically and horizontally.
- **Tie Rod (Conventionals)**
  - Ensure there are no loose or missing parts, tie rod end studs are locked and there is no visible damage.
- **Greasing Points**
  - Ensure greasing points have no sign of visible damage and are free from dirt and obstructions.

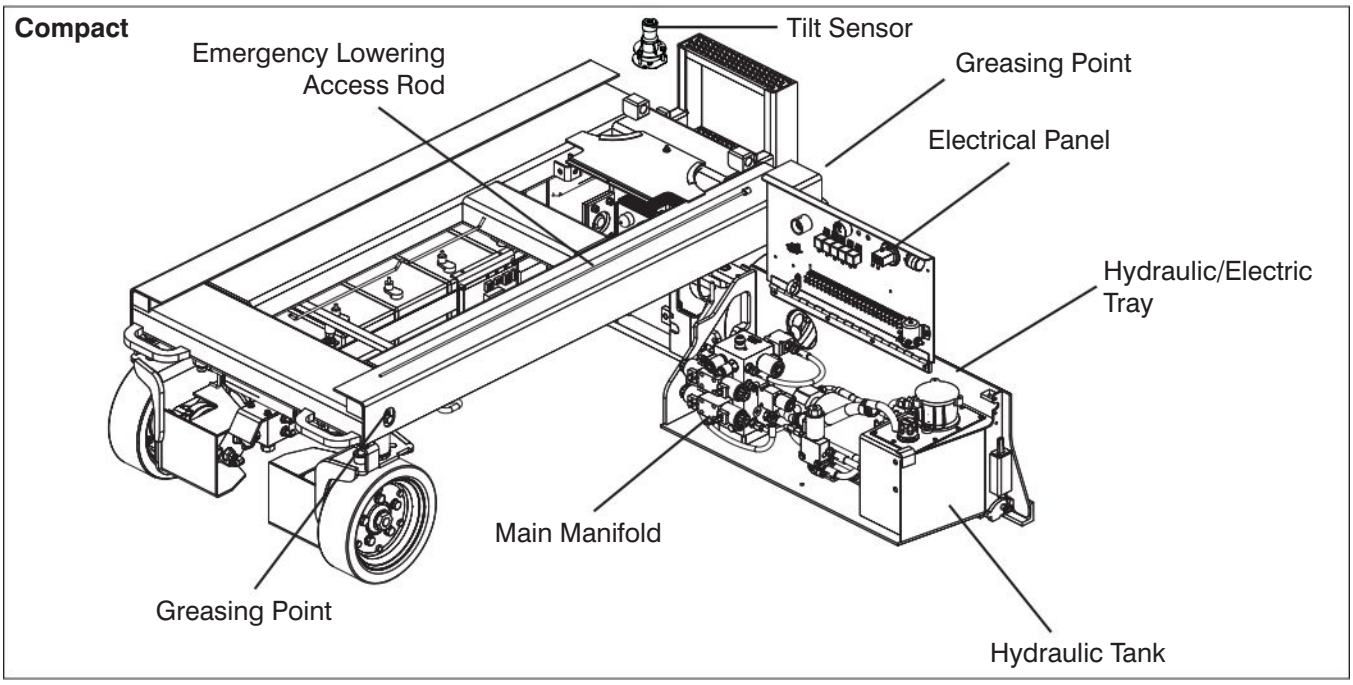

2.8-7 Hydraulic/Electric Tray Side

- Ensure tray latch is secure and in proper working order.

- **Pothole Protection Device**
  - Ensure mechanisms have no sign of visible damage and are free from dirt and obstructions.
- **Hydraulic Tank**
  - Ensure hydraulic filler cap is secure.
  - Ensure tank shows no visible damage and no evidence of hydraulic leakage.
- **Hydraulic Oil**
  - Ensure platform is fully lowered, and then visually inspect the sight gauge located on the side of the hydraulic oil tank.
  - The hydraulic oil level should be at or slightly above the top mark of the sight glass.
- **Hydraulic Pump and Motor**
  - Ensure there are no loose or missing parts and there is no visible damage.
- **Electrical Panel**
  - Ensure panel is properly secured and there is no visible damage.
  - Ensure there are no loose wires or missing fasteners.
- **Proportional and Main Manifolds**
  - Ensure all fittings and hoses are properly tightened and there is no evidence of hydraulic leakage.
  - Ensure there are no loose wires or missing fasteners.
- **Tilt Sensor**
  - Ensure tilt sensor is properly secured and there is no visible damage.
- **Emergency Lowering Access Rod (If Equipped)**
  - Ensure rod is properly secured and there is no visible damage.

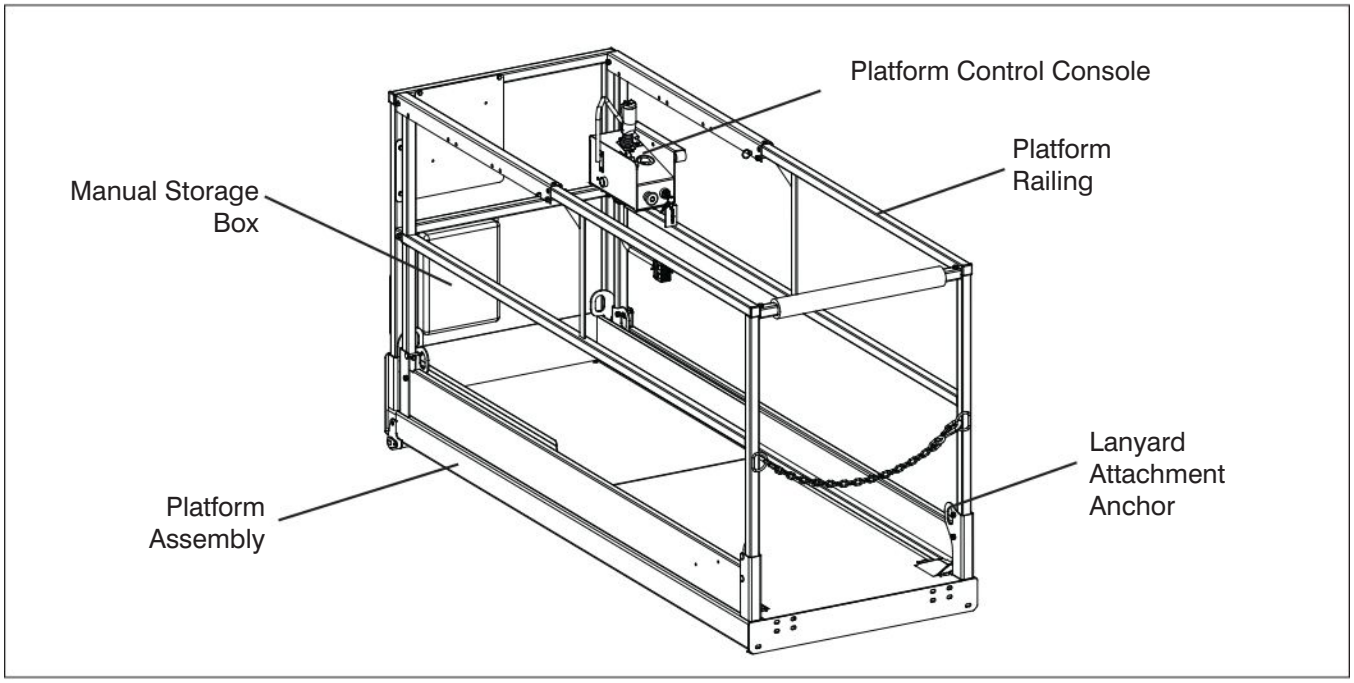

2.8-8 Platform Assembly

WARNING

Ensure that you maintain three points of contact to mount/dismount platform.

1. Use the ladder of aerial platform to access platform.

2. Close the gate.

   - Ensure there are no loose or missing parts and there is no visible damage.
   - Ensure all fasteners are securely in place.
   - Ensure all railings are properly positioned and secured.
   - Ensure gate is in good working order.

- **Lanyard Attachment Anchors**
  - Ensure attachment rings are secure and no visible damage.
- **AC Outlet on Platform**
  - Ensure outlet has no visible damage and free from dirt or obstructions.
- **Platform Control Console**
  - Ensure all switches and controller are returned to neutral and are properly secured.
  - Ensure there are no loose or missing parts and there is no visible damage.
- **Manual**
  Ensure a copy of operating manual is enclosed in manual storage box.
  - Check to be sure manual storage box is present and in good condition.
  - Ensure manuals are legible and in good condition.
  - Always return manuals to the manual storage box after use.

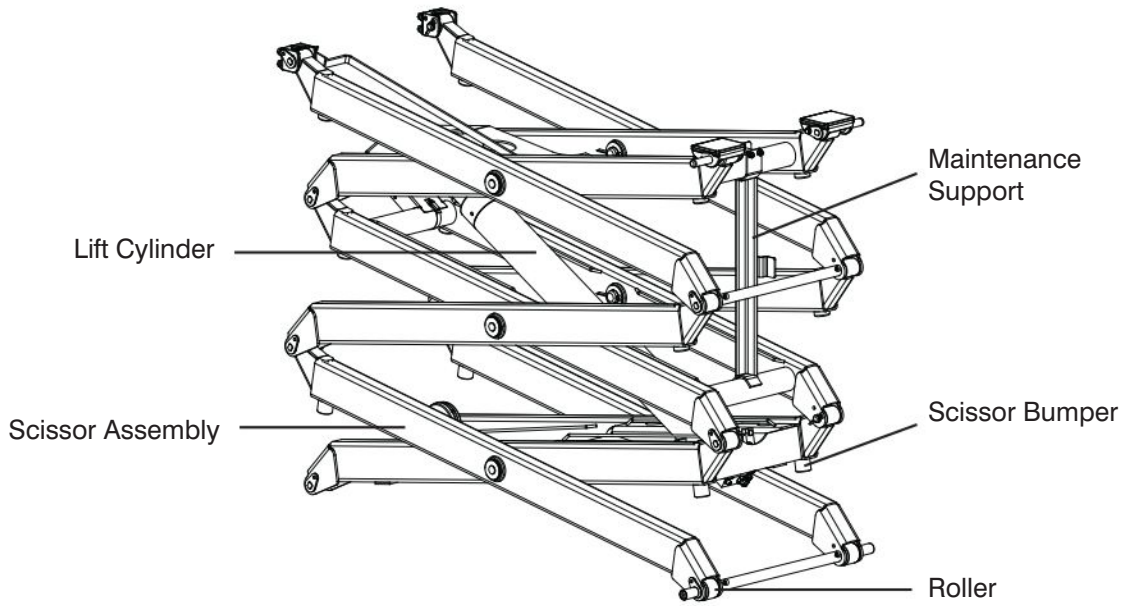

- **Powered Extension Control Console (If Equipped)**
  - Ensure all switches are returned to neutral and are properly secured.
  - Ensure there are no loose or missing parts and there is no visible damage.

WARNING

Ensure that you maintain three points of contact to mount/dismount platform.

3. Use the ladder to dismount from platform.

2.8-9 Lifting Mechanism

1. Raise the platform (refer to Section 2.10-1) until there is adequate clearance to swing down the maintenance support (refer to Section 2.16).

- **Maintenance Support**
  - Ensure maintenance support is properly secured and shows no visible damage.
- **Scissor Assembly**
  - Ensure scissor assembly shows no visible damage and no signs of deformation in weldments.
  - Ensure all pins are properly secured.
  - Ensure cables and wires are properly routed and shows no signs of wear and/or physical damage.
- **Scissor Bumpers**
  - Ensure bumpers are secure and shows no sign of visible damage.
- **Rollers**
  - Ensure rollers are secure and there is no visible damage.
  - Ensure rollers' path of travel are free from dirt and obstructions.
- **Lift Cylinder(s)**
  - Ensure each lift cylinder is properly secured, there are no loose or missing parts and there is no evidence of damage.
  - Ensure all fittings and hoses are properly tightened and there is no evidence of hydraulic leakage.

2. Raise the platform until there is adequate clearance to swing up the maintenance support.

3. Swing up maintenance support into storage bracket.

4. Fully lower the platform.

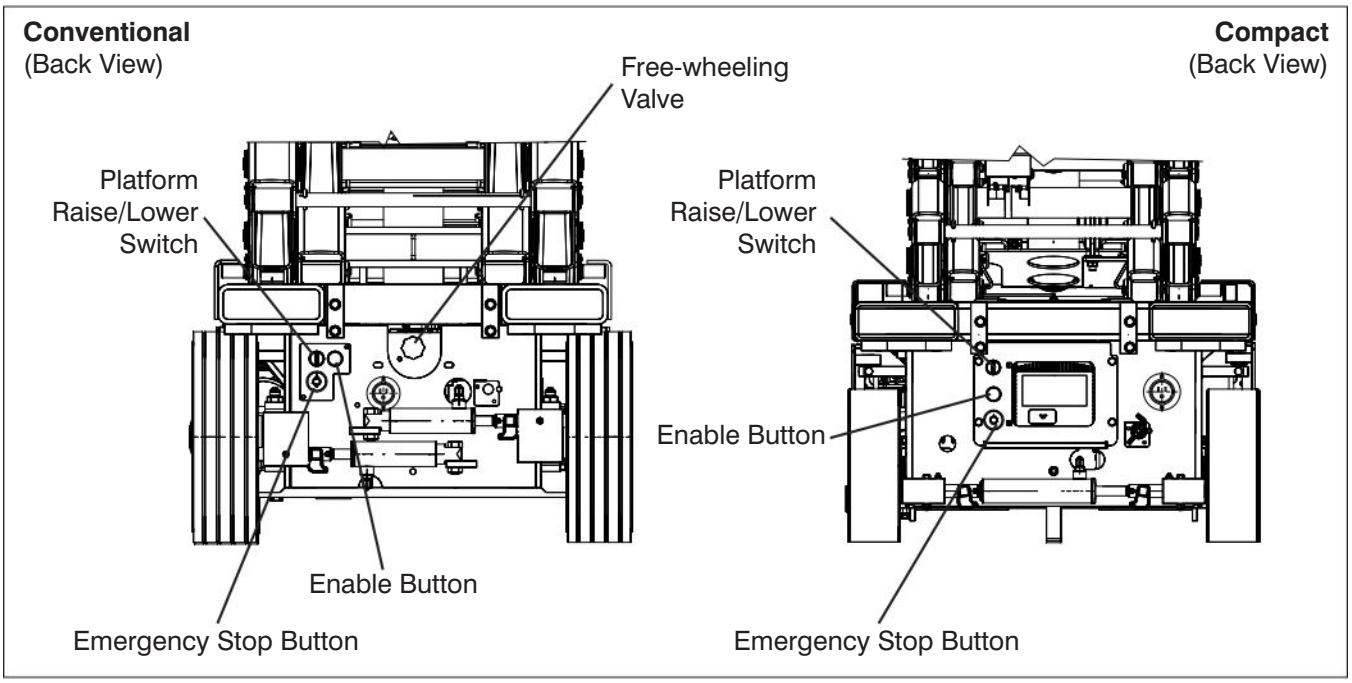

2.9 Function Tests

Function tests are designed to discover any malfunctions before aerial platform is put into service. The operator must understand and follow step-by-step instructions to test all aerial platform functions.

IMPORTANT

Never use a malfunctioning aerial platform. If malfunctions are discovered, aerial platform must be tagged and placed out of service. Repairs to aerial platform may only be made by a qualified service technician.

After repairs are completed, operator must perform a pre-operation inspection and a series of function tests again before putting aerial platform into service.

Prior to performing function tests, be sure to read and understand Section 2.10 - Start Operation.

2.9-1 Test Main Power Disconnect Switch

1. At rear of the base, turn main power disconnect switch to off position.
   Result: Aerial platform functions should not operate.

2.9-2 Base Control Console

WARNING

Ensure that you maintain three points of contact when using the ladder to mount/dismount platform.

1. Use the ladder of aerial platform to access platform.
2. Close the gate.
3. On platform control console, pull out "O" emergency stop button.
4. On platform control console, select off/on key switch to "I" on position.
5. Use the ladder to dismount from platform.
6. Turn main power disconnect switch to on position.

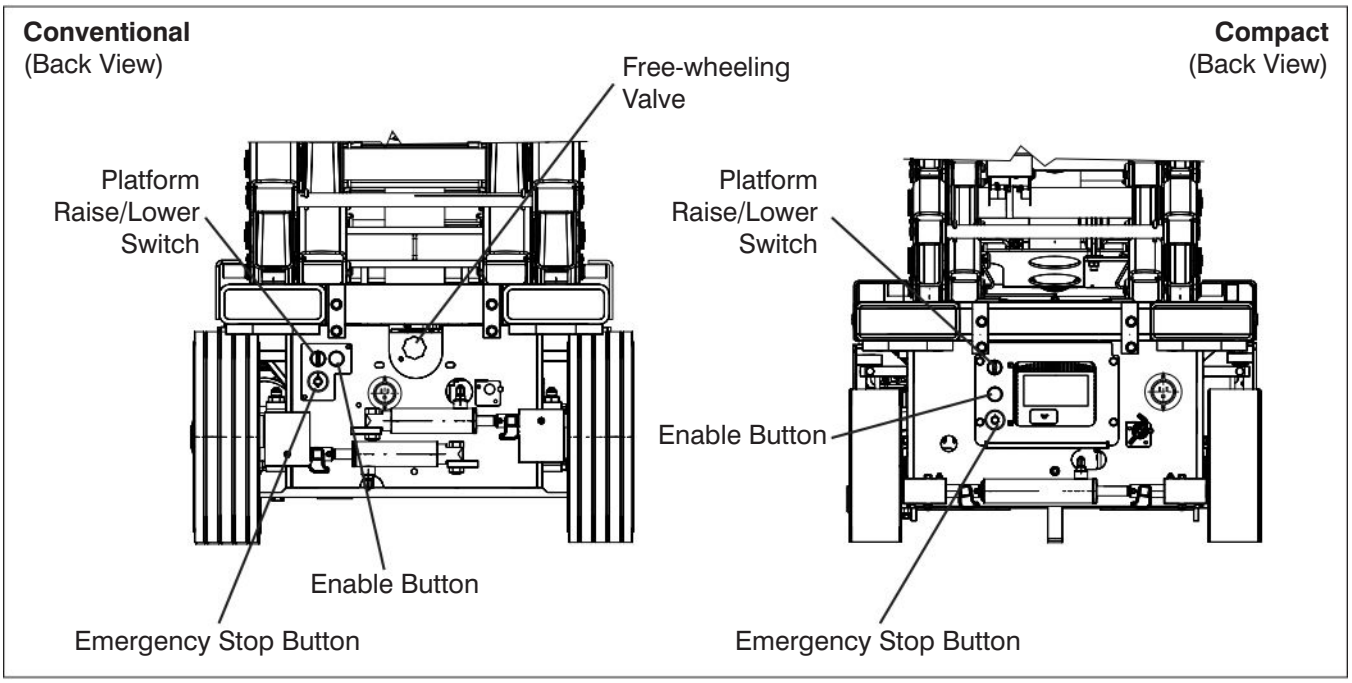

- **Test Base Emergency Stop**

  1. Push in base "" emergency stop button and attempt to raise or lower the platform.
     Result: Platform raising and lowering functions should not operate.

  2. Pull out base "" emergency stop button.

- **Test Enable Button (If Equipped)**

  WARNING

  Be aware of overhead obstructions or other possible hazards around the aerial platform when lifting.

  1. Do not depress "" enable button. Attempt to raise or lower the platform.
     Result: Platform raising and lowering functions should not operate.

- **Test Platform Raise/Lower Switch**

  1. Depress "" enable button (if equipped) and raise or lower the platform with platform raise/lower switch.
     Result: Platform raising and lowering functions should operate.

- **Test Emergency Lowering**

  1. Raise the platform.

  2. Locate holding valve manual override knob at the base of each lift cylinder. Depress and turn counterclockwise. If necessary, use access rod that is located on the base of the aerial platform.

  3. On hydraulic/electric tray, pull out and hold emergency lowering valve to fully lower the platform.
     Result: The platform should lower.

  4. To restore normal operation, depress and turn holding valve manual override knobs clockwise.

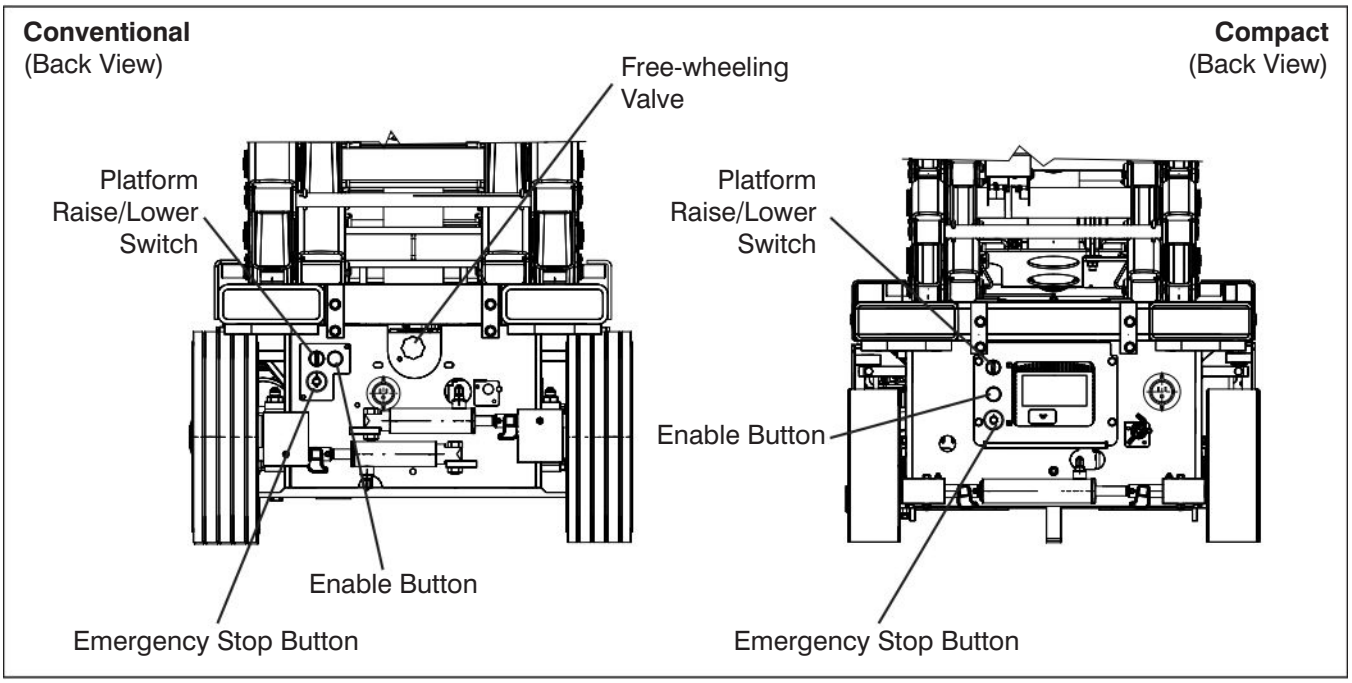

- **Test Free-wheeling**

1. Ensure path of intended motion is clear.
2. Release the brake manually (refer to Section 2.14-2).
3. Turn free-wheeling valve knob counterclockwise to a fully opened position and attempt to push/pull the aerial platform.
   Result: Platform should move.
4. Turn free-wheeling valve knob clockwise to a fully closed position for normal operation.
5. Reengage the brake (refer to Section 2.14-2).

2.9-3 Platform Control Console

1. Ensure base "◯" emergency stop button is pulled out.
2. Ensure main power disconnect switch is in on position.

WARNING

Ensure that you maintain three points of contact when using the ladder to mount/dismount platform.

3. Use the ladder of aerial platform to access platform.
4. Close the gate.
5. On platform control console, pull out "◯" emergency stop button.
6. Select off/on key switch to "I" on position.

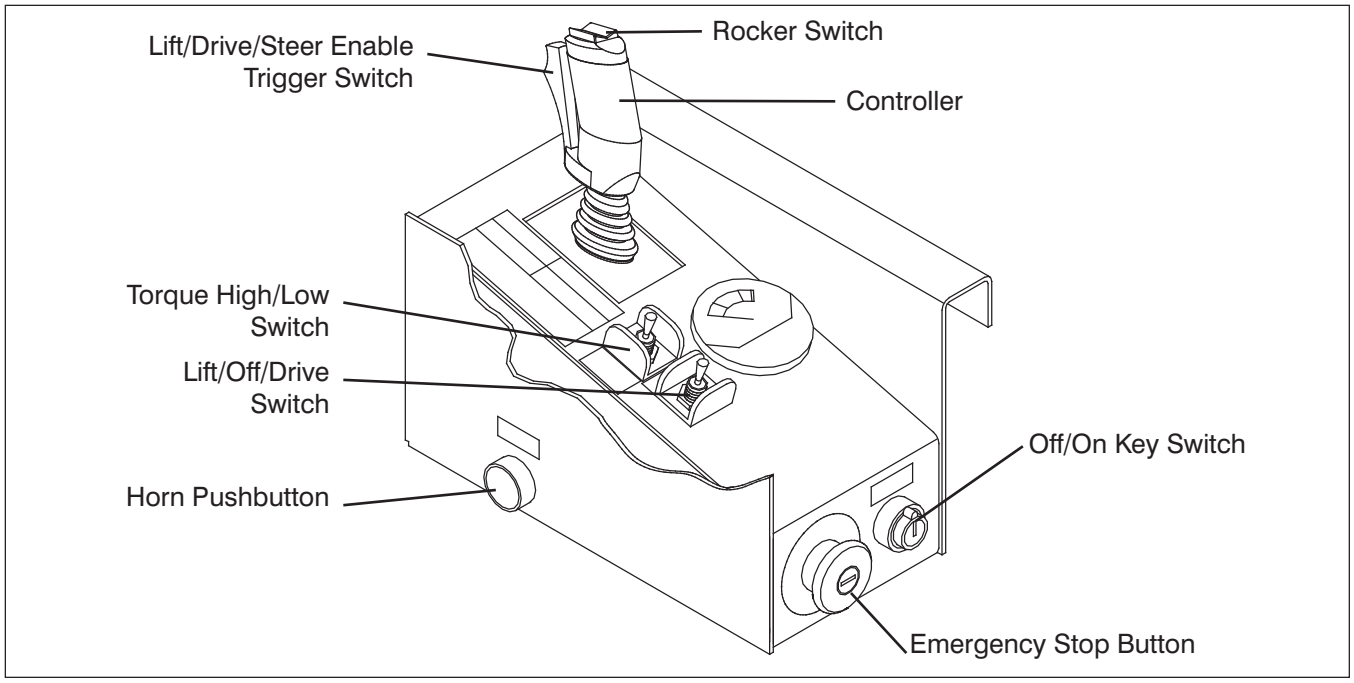

- **Test Platform Emergency Stop**

  1. Push in "" emergency stop button and attempt to activate any platform function.
     Result: All selected platform functions should not operate.

- **Test Enable Trigger Switch**

  1. Pull out "" emergency stop button.
  2. Without activating "" enable trigger switch, attempt to activate any platform function.
     Result: All platform functions should not operate.

- **Test Steering**

  1. Select lift/off/drive switch to "" drive position.
  2. Activate and hold "" enable trigger switch.
  3. Press rocker switch on top of controller handle to "" left and "" right.
     Result: Steer wheels should turn left and right.

- **Test Driving**

  1. Ensure path of intended motion is clear.
  2. Activate and hold ""enable trigger switch.
  3. Slowly move controller handle in "" forward or "" reverse direction until aerial platform begins to move, and then return handle to center position.
     Result: Aerial platform should move in forward or reverse direction, and then come to a stop.

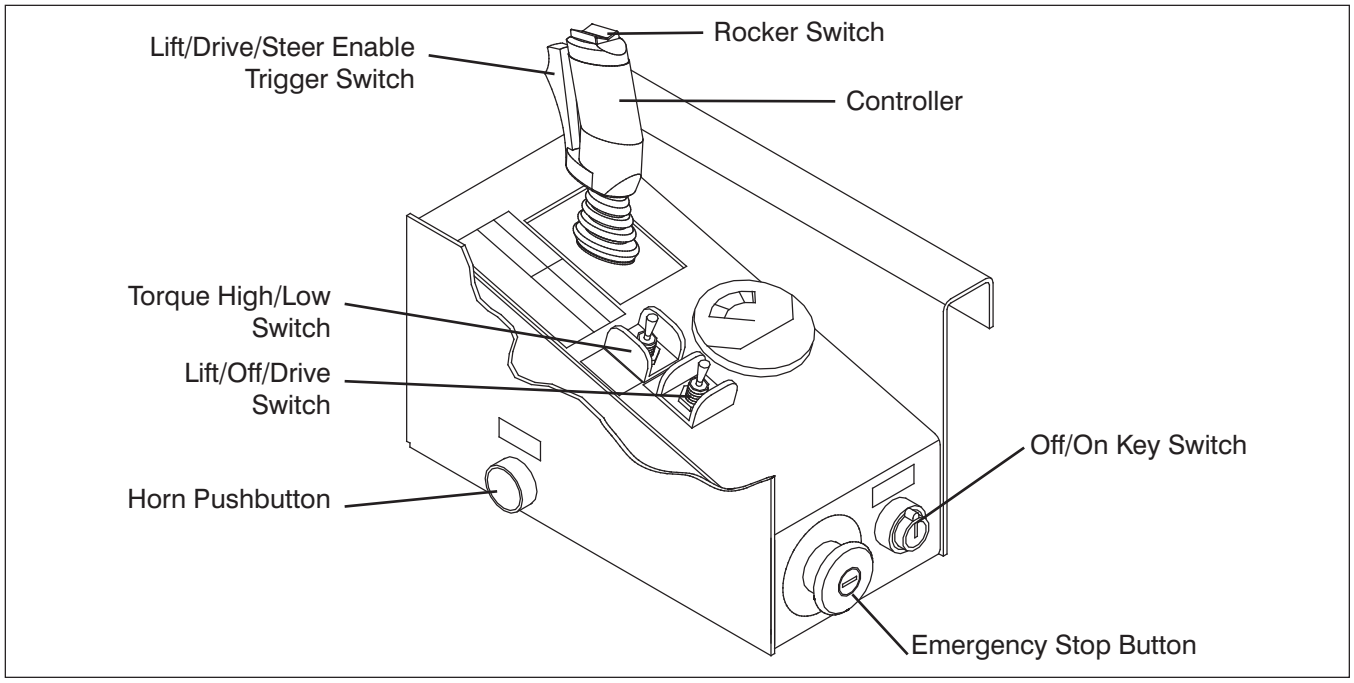

- **Test Brakes**

WARNING

Brakes will engage instantly when you release the controller handle, causing aerial platform to stop immediately.

1. Ensure path of intended motion is clear.
2. Activate and hold "" enable trigger switch.
3. Drive aerial platform "" forward. Test brake by releasing controller handle.
   Result: Aerial platform should come to a stop. If aerial platform pulls to one side while stopping, do not operate aerial platform until brake adjustments have been checked.
4. Drive aerial platform "" forward. Test brake again by releasing "" enable trigger switch only.
   Result: Aerial platform should come to an instant and abrupt stop. If aerial platform does not stop immediately, or if aerial platform pulls to one side while stopping, do not operate aerial platform until brake adjustments have been checked.

- **Test Platform Raising/Lowering**

WARNING

Be aware of overhead obstructions or other possible hazards around the aerial platform when lifting.

1. Select lift/off/drive switch to "" lift position.
2. Activate and hold "" enable trigger switch.
3. Push or pull controller handle until desired height is reached.
   Result: Platform raising and lowering functions should operate.

- **Test Horn**

1. Push "" horn pushbutton.
   Result: Horn should sound.

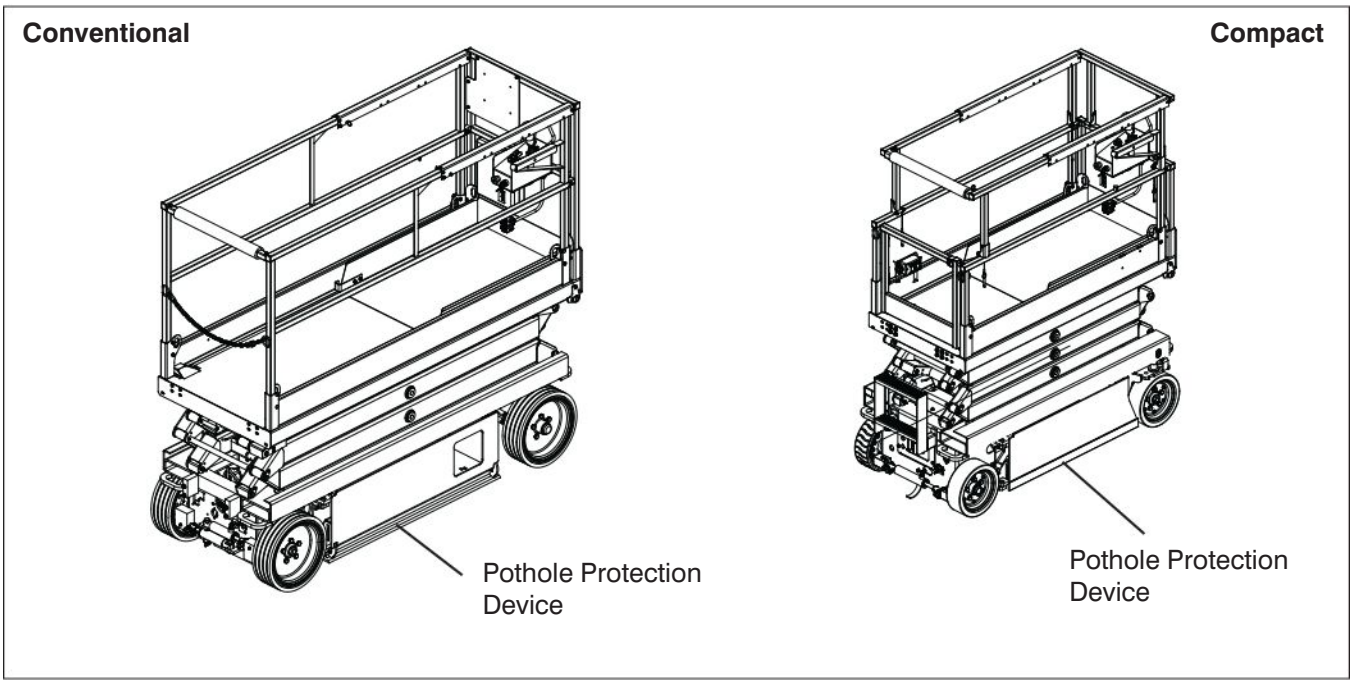

- **Test Pothole Sensor**

WARNING

Ensure that you maintain three points of contact to mount/dismount platform.

1. Use the ladder to dismount from platform and place a block (approximately 3.75 cm) under the hydraulic/electric tray.
2. Use the ladder of aerial platform to access platform.
3. Close the gate.
4. Raise the platform until approximately a height of 2 meters is reached and attempt to drive forward or reverse.
   Result: Aerial platform should not move forward or backward.
5. Repeat the steps above with block placed under battery tray.
   Result: Aerial platform should not move forward or backward.

- **Test Speed Limit**

WARNING

Be aware of overhead obstructions or other possible hazards around the aerial platform when lifting.

1. Ensure path of intended motion is clear.
2. Raise the platform until approximately a height of 2 meters is reached and attempt to drive forward or reverse.
   Result: Aerial platform should move slower than when it is in stowed position.

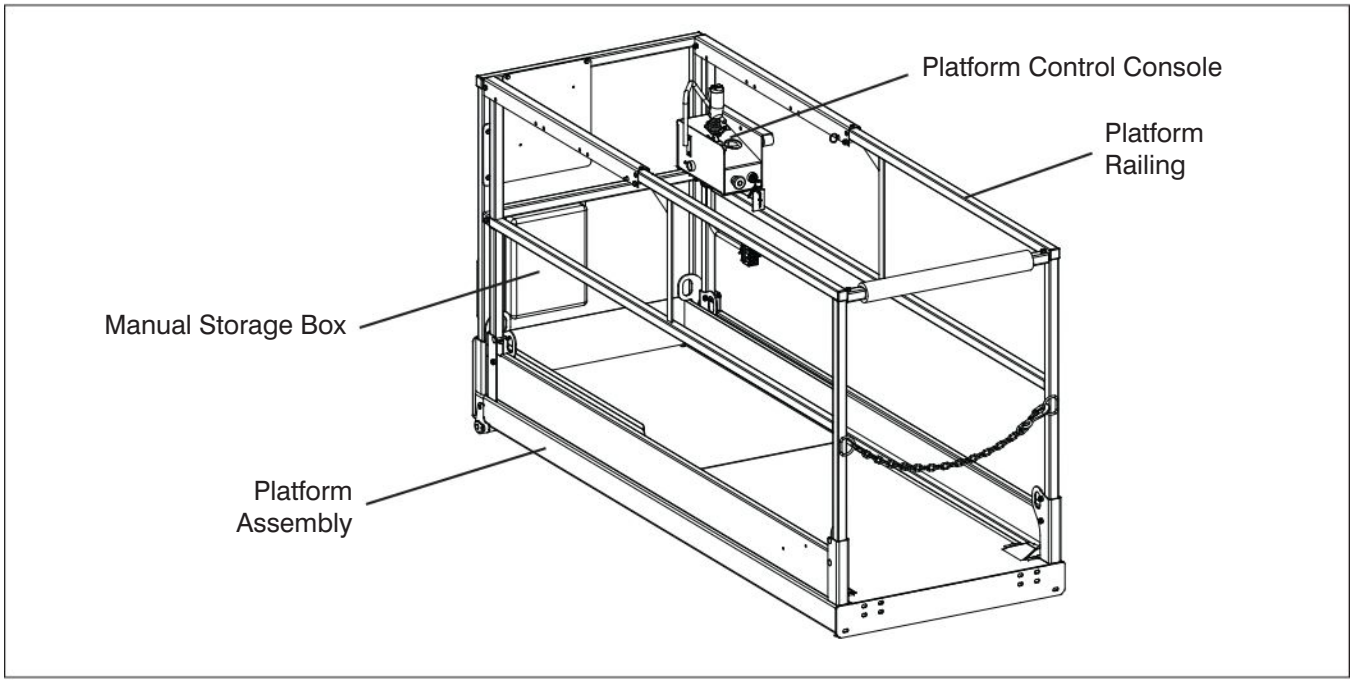

- **Test Tilt Sensor**

WARNING

Be aware of overhead obstructions or other possible hazards around the aerial platform when lifting.

WARNING

Ensure that there are no personnel or obstructions in the path of travel, including blind spots.

1. Move the aerial platform on to a slope not greater than 10°.

2. Use the ladder to dismount from platform.

3. On base control console, slowly raise the platform.
   Result: When platform reaches an appropriate height, a warning signal should sound and platform stop raising as lift and drive controls should be disabled.

2.10 Start Operation

Carefully read and completely understand the operating manual and all warnings and instruction labels (refer to labels section) on the aerial platform.

WARNING

Do not operate this aerial platform without proper authorization and training. Failure to avoid this hazard could result in death or serious injury.

Before operating this aerial platform, perform the following steps:

1. Visual and daily maintenance inspections (see Section 2.8)
2. Function tests (see Section 2.9)
3. Jobsite inspection
   It is the responsibility of the operator to perform a jobsite inspection and avoid the following hazardous situations:

   - holes or drop-offs
   - ditches or soft fills
   - floor obstructions, bumps or debris
   - overhead obstructions
   - electrical cords, hoses and high voltage conductors
   - hazardous locations
   - inadequate surface support to withstand all load forces imposed by the aerial platform
   - wind and weather conditions
   - the presence of unauthorized personnel
   - other possible unsafe conditions

WARNING

An operator should not use any aerial platform that:

- does not appear to be working properly.
- has been damaged or appears to have worn or missing parts.
- has alterations or modifications not approved by the manufacturer.
- has safety devices which have been altered or disabled.
- has been tagged or blocked out for non-use or repair.

Failure to avoid these hazards could result in death or serious injury.

2.10-1 To Raise or Lower Platform Using Base Control Console

WARNING

Be aware of overhead obstructions or other possible hazards around the aerial platform when lifting.

WARNING

Do not lower the platform unless the area is clear of personnel and obstructions.

1. Turn main power disconnect switch to on position.
2. On base control console, pull out "" emergency stop button
3. On base control console, press and hold "" base enable button (if equipped).
4. Select and hold platform raise/lower switch to either "↑" raise or "↓" lower position. Release switch to stop.

2.10-2 To Activate Platform Control Console

1. Turn main power disconnect switch to on position.

2. On base control console, pull out "◯" emergency stop button.

WARNING

Ensure that you maintain three points of contact when using the ladder to mount/ dismount platform.

3. Use the ladder of aerial platform to access platform.

4. Close the gate.

5. On platform control console, pull out "◯" emergency stop button.

6. On platform control console, select off/on key switch to "|"on position.

2.10-3 To Raise or Lower Platform Using Platform Control Console

WARNING

Be aware of overhead obstructions or other possible hazards around the aerial platform when lifting.

WARNING

Do not lower the platform unless the area below is clear of personnel and obstructions.

1. Activate platform control console (refer to Section 2.10-2).

2. On platform control console, select lift/off/drive switch to "↑↓" lift position.

3. Activate and hold "" enable trigger switch.

4. Move controller handle forward or backward until desired height is reached.

NOTE

Lowering is not proportional.

5. Return controller to neutral center position to stop. Release "" enable trigger switch.

WARNING

To protect against unintended movement of the aerial platform, push in the emergency stop button after you have arrived at your desired location or elevation.

NOTE

If the tilt alarm sounds and the platform does not, or only partially raises, immediately lower the platform completely and ensure that the aerial platform is on a firm level surface.

2.10-4 To Drive Forward or Backward

WARNING

Be aware of blind spots when operating the aerial platform.

WARNING

Ensure that there are no personnel or obstructions in the path of travel, including blind spots.

1. Activate platform control console (refer to Section 2.10-2).
2. On platform control console, select lift/off/drive switch to "" drive position.
3. Activate and hold "" enable trigger switch.
4. Move controller handle "" forward or "" backward to desired speed and direction of aerial platform travel.
5. Return controller to neutral center position to stop. Release "" enable trigger switch.

WARNING

To protect against unintended movement of the aerial platform, push in the emergency stop button after you have arrived at your desired location or elevation.

2.10-5 To Steer

1. Activate platform control console (refer to Section 2.10-2).
2. On platform control console, select lift/off/drive switch to "" drive position.
3. Activate and hold "" enable trigger switch.
4. Press "" rocker switch on top of controller handle in either direction to steer.

NOTE

Steering is not proportional. Driving and steering may be active at the same time.

2.10-6 To Select Drive Torque (If Equipped)

1. **High Torque:** Select high torque when climbing grades or when loading or unloading the aerial platform. To activate high torque, select high/low torque switch to "" high torque (low speed) position.

WARNING

Aerial platform must be in fully retracted position when operated on any grade. Driving while elevated on any grade may result in death or serious injury.

2. **Low Torque:** Select low torque when traveling on flat surface. To activate low torque, select high/low torque switch to "" low torque (high speed) position.

WARNING

To protect against unintended movement of the aerial platform, push in emergency stop button after you have arrived at your desired location or elevation.

2.10-7 To Extend/Retract Manual Extension Platform

DANGER

Crushing Hazard - Extension platform must not be retracted manually from the ground.

1. To extend/retract manual extension platform, remove retaining locking pins and push/pull extension platform using the push bar or sliding handrails to one of four or five desired locking positions.

2. Upon extension or retraction, reinsert locking pins. Insert pin on one side of aerial platform in front of upright bar and the pin on the other side of aerial platform behind the upright bar to prevent accidental movement, in either direction, of manual extension platform during travel or transport. Refer to Figure 2-15 for a configuration example.

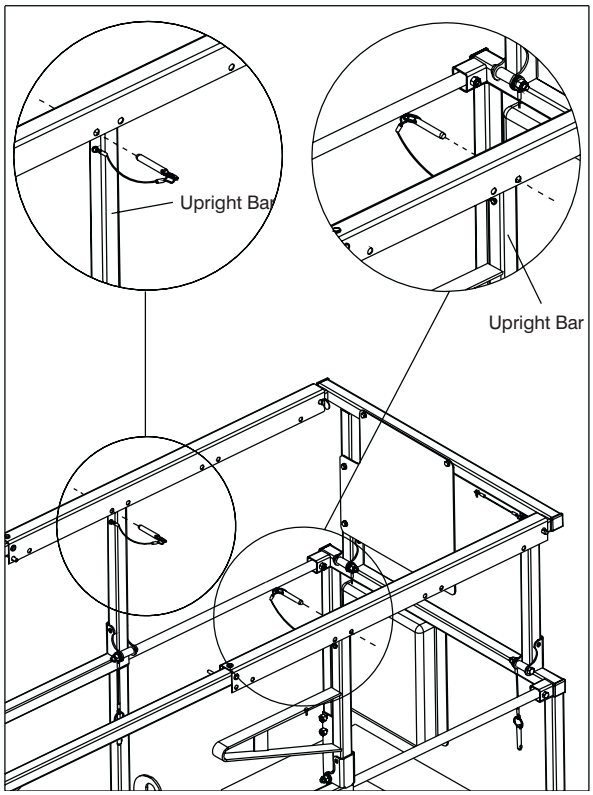

Figure 2-15. Variable Position Manual Extension Platform

2.10-8 To Extend/Retract Powered Extension Platform (If Equipped)

1. To extend/retract powered extension platform, ensure "" emergency stop button is pulled out.

2. On platform control console, select lift/off/drive switch to "" lift position.

3. On powered extension control console, press and hold "" enable switch, then push extend/retract switch to "" extend position. Release switch to stop.

4. To retract extension platform, press and hold "" enable switch, then push extend/retract switch to "" retract position. Release switch to stop.

WARNING

To protect against unintended movement of the aerial platform, push in emergency stop button after you have arrived at your desired location or elevation.

2.10-9 Electrical Inverter (If Equipped)

1. Turn main power disconnect switch to on position.

2. Make sure on/off switch of the inverter is on.

3. Inverter state is indicated by the LEDs on the face of the inverter. A glowing green LED indicates normal operation. If a fault occurs, the status LEDs will indicate the area responsible.

CAUTION

The main power disconnect switch must be turned off at the end of the shift or the batteries will drain.

2.10-10 Shutdown Procedure

1. Completely lower the platform.

2. On platform control console, push in "◯" emergency stop button.

3. Select off/on key switch to "◯" off position and remove the key from the platform control console.

WARNING

Ensure that you maintain three points of contact when using the ladder to mount/ dismount platform.

4. Use the ladder to dismount from platform.

5. Turn main power disconnect switch to off position.

2.11 Guardrail Folding Procedure

When folder down, the folding guardrail system reduces the height of the retracted aerial platform for transporting only.

WARNING

Any lowered guardrail will create a fall hazard. Remain away from the side of the platform while raising or lowering the guardrails to avoid falling.

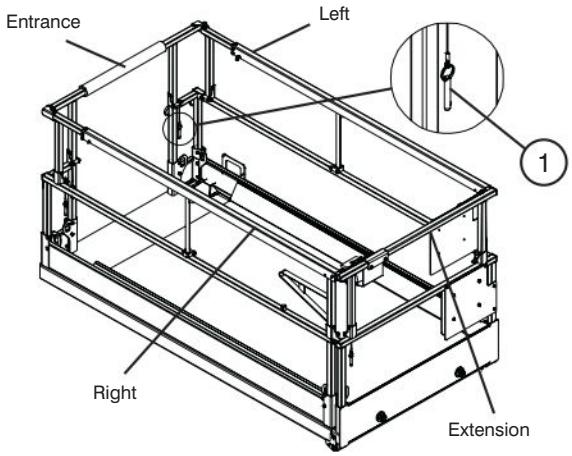

Figure 2-16a. Folding Guardrail System

1. **Guardrail Locking Pin with Lanyard** - This pin is used to lock the guardrail in place.

WARNING

The scissor assembly must be fully lowered before raising or lowering the guardrails.

WARNING

Before operating this aerial platform check the guardrail system for loose or missing locking pins. The guardrail system must be upright and all pins must be locked in place. Death or serious injury could result if the guardrail system is not upright or properly locked.

To fold the guardrail system down:

1. Ensure aerial platform is on level ground.
2. Use the ladder of aerial platform to access platform.
3. Close the gate.
4. Remove the platform control console and outrigger control console (if equipped) and lay them down on the platform.
5. Remove all locking pins.
6. Fold down guardrails in the following order: right-hand side, left-hand side, entrance and extension (refer to Figure 2-16a).
7. Lock in place on the mounting post using the locking pin (refer to Figure 2-16b). Ensure that the detent ball of the pin is all the way through.

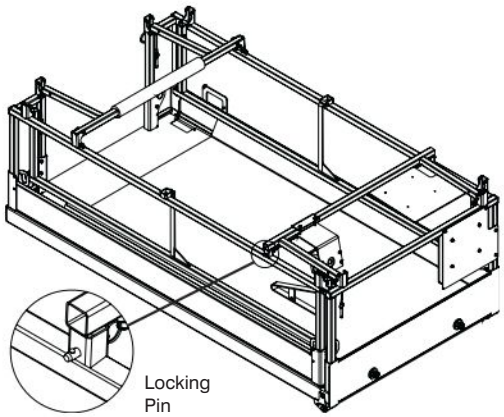

Figure 2-16b. All Guardrails Folded Down

To raise the guardrail system up:

1. Ensure aerial platform is on level ground.
2. Use the ladder of aerial platform to access platform.
3. Remove all locking pins.
4. Swing up guardrails in the following order: extension, entrance, left-hand side and right-hand side.
5. Lock each guardrail in place with the locking pins ensuring that the detent ball of each pin is all the way through. See Figure 2-16b.
6. Mount the platform control console and outrigger control console (if equipped) at the front right of the platform. Lock them in place.

2.12 Loading/Unloading

Know all national, state or territorial/provincial and local rules which apply to your loading/unloading of aerial platforms.

Only qualified personnel shall operate machinery during loading/unloading.

Be sure vehicle capacity and loading equipment hoists, chains, straps, etc., are sufficient to withstand maximum aerial platform weight.

The transport vehicle must be parked on a level surface and must be secured to prevent rolling while the aerial platform is being loaded/unloaded.

2.12-1 Lifting

When it is necessary to lift the Skyjack aerial platform the following conditions must be met:

- The platform must be fully lowered.
- The main power disconnect switch must be in off position.
- The hydraulic/electric and battery trays must be closed and securely latched.
- The extension platform must be retracted and secured.
- The platform control console must be secured to the railings or removed.
- The platform must be cleared of all personnel, tools and materials.
- The lifting/rigging may be attached to all four lifting points as illustrated in Figure 2-17.

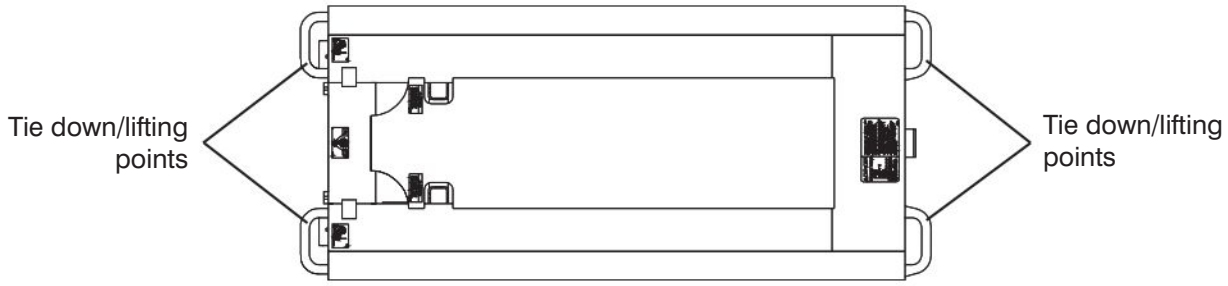

Figure 2-17. Tie Downs/Lifting Points

NOTE

The mass of the aerial platform is as per Table 2-3a or Table 2-3b. The center of gravity is approximately located in the middle of the aerial platform, front to back and side to side, as illustrated in Figure 2-18. Vertically, the center of gravity is approximately just above the base chassis.

Figure 2-18. Center of Gravity

NOTE

The aerial platform can be lifted with a forklift from the sides but Skyjack does not recommend this use. Lift with forks in designated pockets as illustrated in Figure 2-19.

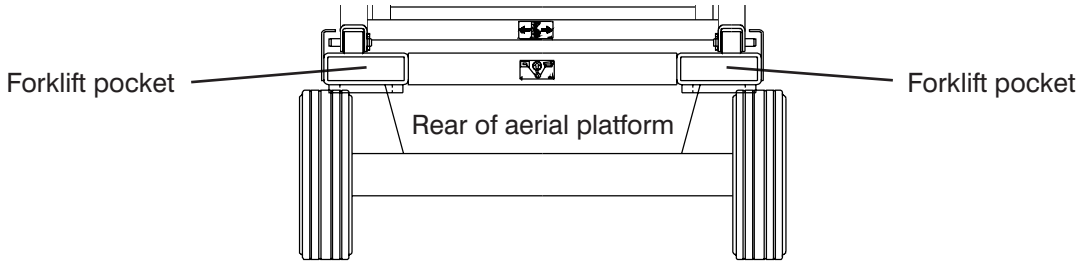

Figure 2-19. Forklift Pockets

2.12-2 Driving

When driving the aerial platform:

- Ramp or dock capacity should be sufficient to withstand maximum aerial platform weight.
- Ramp should be equipped with side guards to prevent inadvertent fall from the ramp.
- Incline should not exceed aerial platform gradeability (refer to Table 2-3a or Table 2-3b).
- Aerial platform brakes should be checked for proper operation.
- Aerial platform speed should be on high torque setting (if equipped).

WARNING

When transporting, the aerial platform must be secured to the truck or trailer deck. Tie downs are available as illustrated in Figure 2-17.

2.13 Moving the Aerial Platform Through a Doorway

WARNING

This procedure is suitable for level ground only.

1. Confirm that the height/width of the doorway is sufficient to allow the aerial platform to pass through.

NOTE

If it is necessary to fold the guardrails, refer to Section 2.11 for guardrail folding procedure.

2. Perform a thorough jobsite inspection prior to operating the aerial platform to identify potential hazards in your work area.
3. Cordon-off the pathway which you intend to travel.
4. Position the aerial platform to allow all future motion, including through the doorway, to be in a forward direction.
5. Turn main power disconnect switch to off position.
6. Use the ladder of aerial platform to access platform.

WARNING

Ensure that you maintain three points of contact when using the ladder to mount/ dismount platform.

7. Close the gate. On platform control console, push in "◯" emergency stop button.
8. Disconnect and remove platform control console from the platform.
9. Fold the guardrails if necessary. Refer to Section 2.11 for guardrail folding procedure.
10. Use the ladder to dismount from platform.
11. Connect platform control console to the connection at the rear of the base.

NOTE

For some models, the connection is located beneath an access panel which requires that the scissor assembly be raised to access it.

12. Ensure there are no personnel in the intended path of travel.
13. Notify those around the pathway that you will be moving the aerial platform.
14. Use a spotter to guide movement. Ensure the spotter remains at a safe distance.
15. Ensure that platform control console is properly oriented in the direction the aerial platform is facing.
16. Turn main power disconnect switch to on position.
17. On platform control console, pull out "◯" emergency stop button.
18. Select off/on key switch to "|"on position.
19. Select lift/off/drive switch to "↕" drive position.
20. Select "🐢" high torque with the high/low torque switch (if equipped) for reduced speed.

WARNING

Do not drive the aerial platform toward yourself.

21. Using as low a speed as practical and the operator positioned behind the aerial platform, drive forward through doorway.
22. Once safely through doorway, push in "◯" emergency stop button and turn main power disconnect switch to off position.
23. Disconnect platform control console and return it to the platform.

WARNING

Ensure that you maintain three points of contact when using the ladder to mount/ dismount platform.

24. Return guardrails to upright position if folded. Refer to Section 2.11 for guardrail folding procedure.

WARNING

Before operating this aerial platform check the guardrail system for loose or missing locking pins. The guardrail system must be upright and all pins must be locked in place.
Death or serious injury could result if the guardrail system is not upright or properly locked.

25. Once the platform control console is securely reconnected and guardrails up, normal operation may continue.

2.14 Winching and Towing Procedures

This section provides the operator with procedures about towing and winching and on how to manually release the brakes.

WARNING

Ensure platform is fully lowered before winching or towing. Sudden motion could cause the aerial platform to become unstable. Death or serious injury could result.

WARNING

In emergency situations where aerial platform functions are not available and lowering is impeded by an obstacle, utmost care must be taken to move aerial platform far enough to clear the obstacle. In such cases, operation must be extremely smooth with no sudden movements and must not exceed a speed of 50 mm/sec.

WARNING

When pushing, winching or towing, do not exceed 3.2 km/h.

WARNING

Do not push, winch or tow aerial platform onto a slope, or brake the towing vehicle rapidly. Do not pull aerial platform down an incline towards a winch.

2.14-1 To Release Free-wheeling Valve

1. Ensure aerial platform is on level ground. Chock or block the wheels to keep aerial platform from rolling.

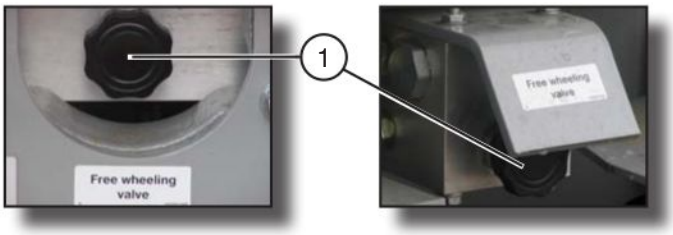

Figure 2-20. Free-wheeling Valve

2. **Free-wheeling Valve** - Turning valve knob counterclockwise (item 1) to a fully opened position allows fluid to flow through the wheel motors, thus providing “free-wheeling.”

WARNING

The free-wheeling valve must be closed tightly (clockwise) for normal operation.

2.14-2 To Release Brakes Manually

Releasing the brakes manually depends on the brake system that is provided on the aerial platform.

WARNING

Do not manually disengage brakes if the aerial platform is on a slope.

2.14-2a Pin Brakes System

Figure 2-21. Brakes

WARNING

Brakes must be manually disengaged for pushing, winching or towing.

1. Ensure aerial platform is on level ground. Chock or block wheels to keep aerial platform from rolling.
2. Turn main power disconnect switch to off position.
3. **For Left-Side Brake:** Using a 19 mm wrench, rotate the block on the brake pin 90° clockwise. The brake pin should be clear of the brake disc.
4. **For Right-Side Brake:** Using a 19 mm wrench, rotate the block on the brake pin 90° counterclockwise. The brake pin should be clear of the brake disc.
5. Remove wheel chocks or blocks, then push, winch or tow aerial platform to desired location.

WARNING

Brakes must be reengaged immediately after reaching the desired location.

6. Position aerial platform on a firm and level surface.
7. Chock or block wheels to prevent aerial platform from rolling.
8. Reengage brakes by doing the following steps.
9. **For Left-Side Brake:** Using a 19 mm wrench, rotate the block on the brake pin 90° counterclockwise.
10. **For Right-Side Brake:** Using a 19 mm wrench, rotate the block on the brake pin 90° clockwise.
11. Close the free-wheeling valve.

2.14-2b Disc Brakes System

Figure 2-22. Brakes

WARNING

Brakes must be manually disengaged for pushing, winching or towing.

1. Ensure aerial platform is on level ground. Chock or block wheels to keep aerial platform from rolling.
2. Turn main power disconnect switch to off position.
3. Locate the brake manifold at the rear of the base.
4. Push in brake auto reset valve plunger (item 1).
5. Grasp brake hand pump (item 2) and rapidly depress until firm resistance is felt. The brakes are now released.
6. Remove wheel chocks or blocks, then push, winch or tow aerial platform to desired location.

WARNING

Brakes must be reengaged immediately after reaching the desired location.

7. Position aerial platform on a firm and level surface.

8. Chock or block wheels to prevent aerial platform from rolling.

9. Reengage the brake by pulling out the brake auto reset valve plunger.

10. Close the free-wheeling valve.

2.15 Emergency Lowering Procedure

This section guides the operator on how to use the emergency lowering system. This system allows platform lowering in the event of an emergency or an electrical system failure.

WARNING

Keep clear of scissors mechanism when using emergency lowering valve.

1. Remove any obstructions from a lowering platform.

2. Extension platform(s) may need to be retracted or aerial platform may need to be moved to clear obstruction. Refer to Section 2.14 for winching and towing procedures.

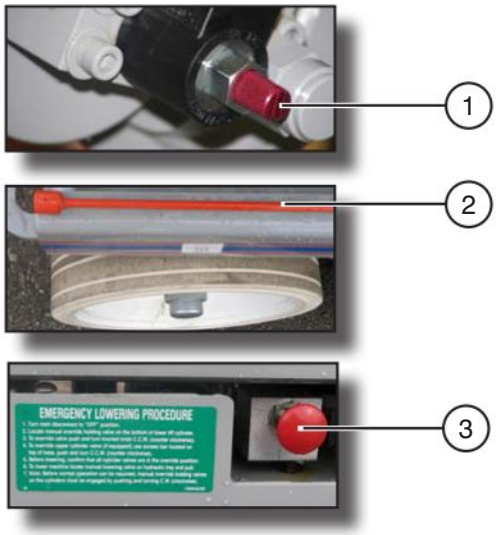

Figure 2-23. Emergency Lowering System

3. Locate the holding valve manual override knob (item 1) at the base of each lift cylinder. Depress and turn counterclockwise. If necessary, use emergency lowering access rod (item 2) that is located on aerial platform base.

4. On hydraulic/electric tray, pull out and hold emergency lowering valve (item 3) to lower platform.

5. To restore normal operation, depress and turn holding valve manual override knobs clockwise.

2.16 Maintenance Support Procedure

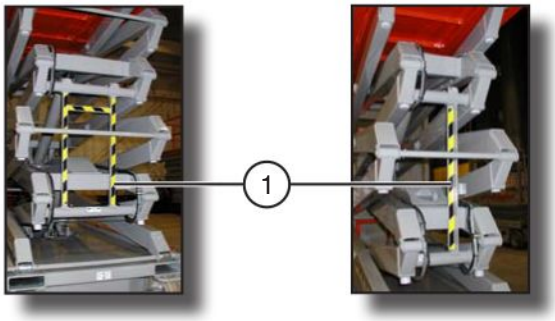

Figure 2-24. Maintenance Support

1. **Maintenance Support** - The maintenance support is a safety mechanism designed to support the scissor assembly. When properly positioned it can support the scissor assembly and empty platform. The maintenance support must be used when inspection and/or maintenance is to be performed within the lifting mechanism.

WARNING

The maintenance support must be used when inspection and/or maintenance or repairs are to be performed within the lifting mechanism. Failure to use this safety mechanism could result in death or serious injury.

Proper Use of Maintenance Support

1. Remove all material from platform.
2. Raise platform until there is adequate clearance to swing down maintenance support.
3. Swing maintenance support down from storage bracket into a vertical position.
4. Remove hands and arms from scissors area.
5. Lower platform until bottom end of maintenance support contacts the labeled cross bar and scissors are supported by maintenance support.
6. Turn off main power disconnect switch.

To Store the Maintenance Support

1. Turn on main power disconnect switch.
2. Raise platform until there is adequate clearance to swing up the maintenance support.
3. Swing bar up into storage bracket.
4. Lower the platform.

WARNING

Do not reach through the scissor assembly when the platform is raised without the maintenance support properly positioned. Failure to avoid this hazard could result in death or serious injury.

2.17 Battery Maintenance

This section provides the operator with procedures on how to service and charge the battery. This also provides charger operation instructions.

2.17-1 Battery Service Procedures

WARNING

Explosion Hazard - Keep flames and sparks away. Do not smoke near batteries.

WARNING

Battery acid is extremely corrosive - Wear proper eye and facial protection as well as appropriate protective clothing. If contact occurs, immediately flush with cold water and seek medical attention.

1. Turn main power disconnect switch to off position.
2. Check battery case for damage.
3. Check battery fluid level in each battery. If plates are not covered by at least 13 mm of solution, add distilled or demineralized water.
4. Clean battery terminals and cable ends thoroughly with a terminal cleaning tool or wire brush.
5. Make sure all battery connections are tight.
6. Replace any battery that is damaged or incapable of holding a lasting charge.
7. Do not use any batteries other than flooded lead-acid batteries of the proper AH rating.

WARNING

Use original or equivalent to the original parts and components for the aerial platform.

2.17-2 Battery Charging Operation

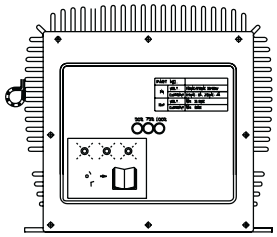

Figure 2-25. Battery Charger

DANGER

Risk of electric shock - Do not immerse the charger in water. Though the charger is highly resistant to water, it is not designed for immersion and an electric shock can occur.

1. Provide adequate ventilation for the batteries and charger. The convection cooled design requires access to cooling air for proper operation. Do not allow blankets or other materials to cover the charger. Although the charger protects itself against overheating, the charger cooling fins should be cleaned if clogged with debris for best performance.

WARNING

There could be a spark during charging. Be careful when using fuels, solvents or other flammables near the charger or batteries.

2. Connect the power supply cord to a properly grounded 100V/50 or 60Hz, 115V/50 or 60Hz, or 230V/50 or 60Hz socket. This charger automatically senses and adjusts to the AC input voltage range.

CAUTION

When changing the input voltage wait until all the LEDs are OFF or wait a minimum of 20 seconds before switching on the new voltage.

3. The charging time is affected by numerous factors including battery Amp-Hour capacity, depth of discharge, battery temperature, and battery condition (new, old or defective). Batteries larger than 240 AH can be recharged but will take longer.

WARNING

Do not disconnect the DC output wires near the batteries when the charger is ON. The resulting arcing could cause the batteries to explode. If the charger must be disconnected, first disconnect the AC power supply cord from its outlet, then disconnect the charger DC connections.

WARNING

Risk of an electric shock - Do not touch un-insulated parts of the charger output wires, battery connector, or battery terminals.

WARNING

Visually and manually inspect to verify the DC output wires and terminals are in good working condition before each use.

4. The charger will start automatically within four to six seconds. The charger will start even with severely discharged batteries (down to 1V terminal voltage). Once charging starts, the LEDs indicate the charging progress.

Charging State LED

State of charge	1ST LED	2ND LED	3RD LED
0 to 50%	Blinking	Off	Off
50% to 75%	On	Blinking	Off
75% to 100%	On	On	Blinking
100%	On	On	On

60133AA

The charger goes into an equalizing charge mode after the batteries are charged and all 3 LEDs are “ON”. The charger will continue to charge at a low current then shut off automatically when complete. If all 3 LEDs blink together, there is a problem.

Take proper action according to the following instructions:

3 LEDs blink once simultaneously:
Output connection error. Check the battery and charger connection. The output may not be connected to the batteries or the connections to the batteries may have corroded or loosened. The output may be shorted due to improper connection to the batteries or pinched wires. The output may be connected in reverse polarity to the batteries. The charger is not damaged by any of these problems.

3 LEDs blink twice simultaneously:
The charger is indicating that the AC voltage is too low or too high. Check the AC input voltage.

3 LEDs blink three times simultaneously:
Charger is overheated. No action required. When the charger cools, charging will restart automatically. Check and correct for dirt or other debris on charger that may be reducing cooling.

3 LEDs blink four times simultaneously:
Input or output over current. No action required, charger will correct and restart automatically.

100% LED lamp blinks:
Charger 18-hour timer has timed out due to battery problem.

Batteries do not fully charge.
If the batteries are charged overnight, make sure the AC supply is not being switched off at night with other building items. Check battery condition and for dead cells or reduced capacity. Replace charger only if other problems are not found.

The AC line circuit breaker or fuse is blown.
A defective circuit breaker or fuse, an overloaded circuit, or a charger problem can cause this condition. Try connecting the charger to a different AC outlet (on a different circuit) in the building. If the AC supply checks good, the charger should be replaced.

EE-Rated Aerial Platforms

WARNING

Do not charge batteries in hazardous area! The EE-rating of a aerial platform does not include the charging of batteries.

1. Move the aerial platform to an area designated for battery charging. Refer to NFPA 505 for charging setup. NFPA 505 is a publication of the **National Fire Protection Association, Inc.,** Batterymarch Park, Quincy, MA 02269 (USA).

2. Connect battery charger DC plug into the battery tray.

3. Charge batteries. Refer to Section 2.17-2 for battery charging operation. When charge cycle is completed, disconnect charger plug from battery tray.

Table 2.1 Standard and Optional Features - AS

Models	Compacts		Conventionals						
	3215	3219	3220	3226	4620	4626	4632	6826	6832
STANDARD EQUIPMENT									
Platform controls	*	*	*	*	*	*	*	*	*
Base controls	*	*	*	*	*	*	*	*	*
Drivable at full height	*	*	*	*	*	*	*	*	*
Positive traction	*	*	*	*	*	*	*	*	*
Dual holding brakes	*	*	*	*	*	*	*	*	*
Battery charge indicator	*	*	*	*	*	*	*	*	*
Battery level indicator	*	*	*	*	*	*	*	*	*
Low voltage battery protection	*	*	*	*	*	*	*	*	*
Color coded and numbered wiring system	*	*	*	*	*	*	*	*	*
Swing out trays for easy access	*	*	*	*	*	*	*	*	*
Proportional control for drive/lift with joystick control	*	*	*	*	*	*	*	*	*
Tilt alarm with drive/lift cut out	*	*	*	*	*	*	*	*	*
AC wiring to platform	*	*	*	*	*	*	*	*	*
Lanyard attachment points	*	*	*	*	*	*	*	*	*
Forklift pockets/tie downs/lifting lugs	*	*	*	*	*	*	*	*	*
Hydraulic oil level and temperature indicators	*	*	*	*	*	*	*	*	*
Operator horn	*	*	*	*	*	*	*	*	*
Hourmeter	*	*	*	*	*	*	*	*	*
Hinged railing system				*		*	*	*	*
Variable front wheel hydraulic drive	*	*							
Variable rear wheel hydraulic drive			*	*	*	*	*	*	*
Free-wheeling valve	*	*	*	*	*	*	*	*	*
Pothole protection	*	*	*	*	*	*	*		
3’ (0.9m) Extension deck	*	*	*	*				*	*
4’ (1.2m) Extension deck					*	*	*		
OPTIONAL EQUIPMENT									
Flashing Light	*	*	*	*	*	*	*	*	*
Shop airline to platform	*	*	*	*	*	*	*	*	*
Spring loaded half or full gate entry**	*	*	*	*	*	*	*	*	*
Hinged railing system	*	*	*		*				
5’ (1.5m) Powered deck extension								*	*
6’ (1.8m) Powered deck extension			*		*	*			
All motion alarm	*	*	*	*	*	*	*	*	*
Non-marking foam filled tires								*	*

60381AF-AS

** Full height gate not available with hinged railings on 32xx models

Table 2.2 Owner's Annual Inspection Record

Model Number: _____					Serial Number: _____				
Recording Date									
Recording Year #	1	2	3	4	5	6	7	8	9
Owner's Name									
Inspected By									

60141AB

As described earlier in this section, this decal is located on the scissor assembly. It must be completed after an annual inspection has been completed. Do not use the aerial platform if an inspection has not been recorded in the last 13 months.

Table 2.3a Specifications and Features

MODEL	3215	3219	3220	3226
Weight *	1090 kg	1170 kg	1583 kg	1864 kg
Width	0.81 m		0.84 m	
Length	1.78 m		2.32 m	
Platform Size	0.66 x 1.57 m		0.71 x 2.13 m	
Height				
Stowed Platform Height	0.88 m	0.99 m	0.97 m	1.15 m
Platform Elevated Height	4.6 m	5.8 m	6.1 m	7.9 m
Working Height	6.4 m	7.6 m	7.92 m	9.75 m
Stowed Height Railings Up	1.88 m	1.99 m	2.02 m	2.2 m
Drive Height (All Standards)	FULL			
Standard Operating Time				
Lift Time (No Load)	18 sec.	20 sec.	27 sec.	43 sec.
Lower Time (No Load)	32 sec.	39 sec.	41 sec.	52 sec.
Lift Time (Rated Load)	23 sec.	25 sec.	33 sec.	56 sec.
Lower Time (Rated Load)	24 sec.	29 sec.	29 sec.	42 sec.
Chassis				
High Travel Speed	3.2 km/h			3.9 km/h
Elevated Drive Speed	1.05 km/h		1 km/h	1.1 km/h
High Torque Drive Speed	N/A		1.9 km/h	2.14 km/h
Gradeability	23%		25%	
Tires (Solid Rubber)	12 x 4 x 8		16 x 5 x 12	

60156AJ-AS-1

* Weight with standard 0.9 m or 1.2 m extension platform.
Refer to nameplate for aerial platforms with 1.5 m or 1.8 m extension platform.

Table 2.3b Specifications and Features

MODEL	4620	4626	4632	6826	6832
Weight †	1860 kg	2130 kg	2300 kg	2440 kg	2700 kg
Width	1.17 m			1.73 m	
Length	2.31 m			2.52 m	
Platform Size	1.07 x 2.11 m			1.53 x 2.05 m	
Height					
Working	7.92 m	9.75 m	11.6 m	9.75 m	11.6 m
Platform Elevated	6.1 m	7.9 m	9.7 m	7.9 m	9.7 m
Fixed Railing	1.96 m	2.15 m	2.24 m	2.37 m	2.51 m
Platform Lowered	0.97 m	1.14 m	1.23 m	1.27 m	1.40 m
Drive Height	6.1 m	7.9 m	9.7 m	7.0 m	7.9 m
Standard Operating Time					
Lift Time (No Load)	24 sec.	48 sec.	50 sec.	N/A	58 sec.
Lower Time (No Load)	48 sec.	45 sec.	62 sec.	N/A	63 sec.
Lift Time (Rated Load)	32 sec.	54 sec.	59 sec.	65 sec.	60 sec.
Lower Time (Rated Load)	32 sec.	32 sec.	49 sec.	57 sec.	51 sec.
Chassis					
High Travel Speed	3.2 km/h				
Elevated Drive Speed	0.90 km/h				0.64 km/h
High Torque Drive Speed	1.6 km/h				
Gradeability	25%				
Tires	16 x 5 x 12 Solid Rubber			23 x 10.5 x 12 Foam Filled[1]	

60156AJ-AS-2

† Weight with standard 0.9m extension platform. Refer to serial nameplate for specific applications.

1 Fill hardness: 55 Durometer

Table 2.4 Floor Loading Pressure

MODEL		Total Aerial Platform Weight		Total Aerial Platform Load					
				Wheel		LCP**		OUP**	
		kg	lb.	kg	lb.	KPa (kN/m^2)	psi	KPa (kN/m^2)	psf
3215	min*	1089	2400	435	960	689.48	100	7.66	160
	max*	1361	3000	544	1200	758.42	110	9.58	200
3219	min*	1170	2580	468	1032	689.48	100	8.14	170
	max*	1420	3130	568	1252	758.42	110	10.05	210
3220	min*	1583	3490	633	1396	758.42	110	8.38	175
	max*	2195	4840	878	1936	896.32	130	11.73	245
3226	min*	1860	4100	746	1644	827.37	120	10.05	210
	max*	2091	4610	836	1844	896.32	130	11.25	235
4620	min*	1864	4110	664	1464	1316.90	191	6.99	146
	max*	2549	5620	864	1904	1537.53	223	9.53	199
4626	min*	2173	4790	884	1948	1454.79	211	8.19	171
	max*	2422	5340	1038	2288	1620.27	235	9.15	191
4632	min*	2299	5068	958	2112	1434.11	208	8.60	180
	max*	2616	5768	1085	2392	1516.85	220	9.77	204
6826	min*	2368	5220	947	2088	537.79	78	5.38	112
	max*	2912	6420	1165	2568	579.16	84	6.55	137
6832	min*	2663	5870	1065	2348	565.37	82	6.00	125
	max*	3207	7070	1283	2829	648.11	94	7.24	151

60354AD-AS

* **min** - Total aerial platform weight with no options

max - Aerial platform weight + all options + full capacity

** **LCP - Locally Concentrated Pressure** is a measure of how hard the aerial platform presses on the areas in direct contact with the floor. The floor covering (tile, carpet, etc.) must be able to withstand more that the indicated values above.

OUP - Overall Uniform Pressure is a measure of the average load the aerial platform imparts on the whole surface directly underneath it. The structure of the operating surface (beams, etc.) must be able to withstand more than the indicated values above.

NOTE:

The **LCP** or **OUP** that an individual surface can withstand varies from structure to structure and is generally determined by the engineer or architect for that particular structure.

Floor Loading Pressure

Locally Concentrated Pressure (LCP):

Foot Print Area = Length x Width

$$LCP = \frac{\text{Weight of Aerial Platform + Capacity}}{\text{Foot Print Area x 4 (Tires)}}$$

Overall Uniform Pressure (OUP):

Base Area = Length x Width

$$OUP = \frac{\text{Weight of Aerial Platform + Capacity}}{\text{Base Area}}$$

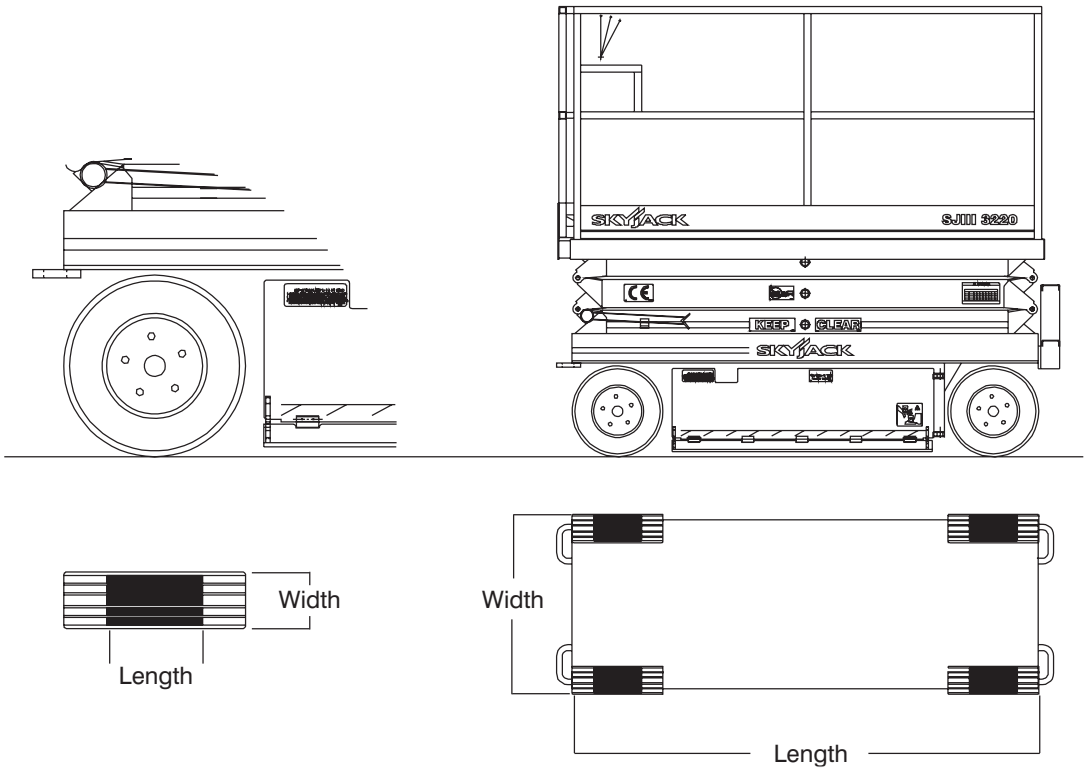

WARNING

Intermixing tires of different types or using tires of types other than those originally supplied with this equipment can adversely affect stability. Therefore, replace tires only with the exact original Skyjack-approved type. Failure to operate with matched approved tires in good condition may result in death or serious injury.

Table 2.5 Maximum Platform Capacities (Evenly Distributed)

MODEL	Max. Side Force (N)	Max. Wind (m/s)	Manual Extension Platform				Powered Extension Platform			
			Total Capacity		Extension Capacity		Total Capacity		Extension Capacity	
3215	400	0	227 kg	2 Persons	113 kg	1 Person	N/A			
	200	12.5	227 kg	1 Person	227 kg					
3219	400	0	249 kg	2 Persons	113 kg	1 Person	N/A			
	200	12.5	120 kg	1 Person	120 kg					
3220	400	0	408 kg	2 Persons	136 kg	1 Person	N/A			
	200	12.5	227 kg	1 Person	227 kg					
3226*	400	0	227 kg	2 Persons	113 kg	1 Person	N/A			
	200	12.5	120 kg	1 Person	120 kg					
4620	400	12.5	590 kg	3 Persons	136 kg	1 Person	590 kg	3 Persons	136 kg	1 Person
4626	400	12.5	454 kg	3 Persons	136 kg	1 Person	454 kg	3 Persons	136 kg	1 Person
4632	400	12.5	317 kg	2 Persons	113 kg	1 Person	N/A			
6826	400	12.5	544 kg	3 Persons	136 kg	1 Person	N/A			

NOTE: Overall Capacity - Occupants and materials not to exceed rated load.

General Maintenance

Before attempting any repair work, disconnect the battery by turning the main power disconnect switch to off position. Preventive maintenance is the easiest and least expensive type of maintenance.

Table 2.6 Maintenance and Inspection Schedule

Frequency	Daily	3 months or 150 hours	Yearly
Visual and Daily Maintenance Inspections			
Labels	A	B*	
Electrical	A		
Limit Switches	A		
Hydraulic	A		
Entrance Side			
Main Power Disconnect Switch	A		
Base Control Switches	A		
Free-wheeling Value Knob	A		
Brakes	A		
AC Outlet Receptacle	A		
Ladder	A		
Battery Tray Side			
Pothole Protection Device	A		
Battery Tray	A		
Battery Charger	A		
Battery	A		
Steer Cylinder Assembly	A		
Wheel/Tire Assembly	A		
Tie Rod (Conventionals)	A		
Greasing Points	A		
Hydraulic/Electric Tray Side			
Pothole Protection Device	A		
Hydraulic Tank	A		
Hydraulic Oil	A		
Hydraulic Pump and Motor	A		
Electrical Panel	A		
Proportional and Main Manifolds	A		
Tilt Sensor	A		
Emergency Lowering Access Rod (If Equipped)	A		
Platform Assembly	A		
Lanyard Attachment Anchors	A		
AC Outlet on Platform	A		
Platform Control Console	A		
Manual	A		
Powered Extension Control Console (If Equipped)	A		

Frequency	Daily	3 months or 150 hours	Yearly
Lifting Mechanism		B*	
Maintenance Support	A		
Scissor Assembly	A		
Scissor Bumpers	A		
Rollers	A		
Lift Cylinder(s)	A		
Function Tests			
Test Main Power Disconnect Switch	A	B*	
Base Control Console			
Test Base Emergency Stop	A		
Test Enable Button (If Equipped)	A		
Test Platform Raise/Lower Switch	A		
Test Emergency Lowering	A		
Test Free-wheeling	A		
Platform Control Console			
Test Platform Emergency Stop	A		
Test Enable Trigger Switch	A		
Test Steering	A		
Test Driving	A		
Test Brakes	A		
Test Platform Raising/Lowering	A		
Test Lowering Warning	A		
Test Horn	A		
Test Pothole Sensor	A		
Test Speed Limit	A		
Test Tilt Sensor	A		

60598AA-AS

A - Perform Visual and Daily Maintenance Inspections & Functions Test. Refer to Section 2.8 and Section 2.9 of this manual.
B - Perform Scheduled Maintenance Inspection. Refer to Service & Maintenance manual.
***** - Maintenance must be performed only by trained and competent personnel who are familiar with mechanical procedures.

WARNING

Use original or equivalent to the original parts and components for the aerial platform.

Table 2.7 Operator's Checklist

OPERATOR'S CHECKLIST

Serial Number: _____

Model: _____

Hourmeter Reading: _____ Operator's Name (Printed): _____

Date: _____

Time: _____ Operator's Signature: _____

Each item shall be inspected using the the appropriate section of the Skyjack operating manual.
As each item is inspected, check the appropriate box.

P - PASS
F - FAIL
R - REPAIRED
NA - NOT APPLICABLE

❑ DAILY
❑ FREQUENTLY
❑ ANNUALLY
❑ BI-ANNUALLY

	N/A	P	F	R
Visual and Daily Maintenance Inspections				
Labels				
Electrical				
Limit Switches				
Hydraulic				
Entrance Side				
Main Power Disconnect Switch				
Base Control Switches				
Free-wheeling Valve Knob				
Brakes				
AC Outlet Receptacle				
Ladder				
Battery Tray Side				
Pothole Protection Device				
Battery Tray				
Battery Charger				
Battery				
Steer Cylinder Assembly				
Wheel/Tire Assembly				
Tie Rod (Conventionals)				
Greasing Points				
Hydraulic/Electric Tray Side				
Pothole Protection Device				
Hydraulic Tank				
Hydraulic Oil				
Hydraulic Pump and Motor				
Electrical Panel				
Proportional and Main Manifolds				
Tilt Sensor				
Emergency Lowering Access Rod (If Equipped)				
Platform Assembly				
Lanyard Attachment Anchors				
AC Outlet on Platform				
Platform Control Console				
Manual				
Powered Extension Control Console (If Equipped)				

	N/A	P	F	R
Lifting Mechanism				
Maintenance Support				
Scissor Assembly				
Scissor Bumpers				
Rollers				
Lift Cylinder(s)				
Function Tests				
Test Main Power Disconnect Switch				
Base Control Console				
Test Base Emergency Stop				
Test Enable Button (If Equipped)				
Test Platform Raise/Lower Switch				
Test Emergency Lowering				
Test Free-wheeling				
Platform Control Console				
Test Platform Emergency Stop				
Test Enable Trigger Switch				
Test Steering				
Test Driving				
Test Brakes				
Test Platform Raising/Lowering				
Test Lowering Warning				
Test Horn				
Test Pothole Sensor				
Test Speed Limit				
Test Tilt Sensor				

60600AA-AS

Note:
Make a copy of this page or visit the Skyjack web site:
www.skyjack.com for a printable copy.

Labels and Nameplates - Models 3215 & 3219

Right Side

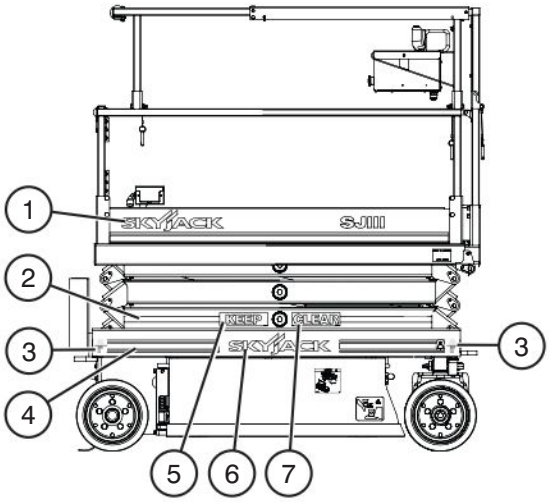

No.	Label Pictorial	Description
1	SKYJACK	**Skyjack Logo** Small Skyjack logo - blue
2		**Caution Tape Stripe** Caution stripe
3	570 kg (1260 lb)	**Wheel Load 570 kg/1260 lb.** Indicates rated wheel load.
4		**Tape - Red/Blue/Red** Skyjack pinstripe
5	KEEP	**"Keep"** Keep clear.
6	SKYJACK	**Skyjack Logo** Small Skyjack logo - blue and red
7	CLEAR	**"Clear"** Keep clear.

Labels and Nameplates - Models 3215 & 3219

Right Side (Continued)

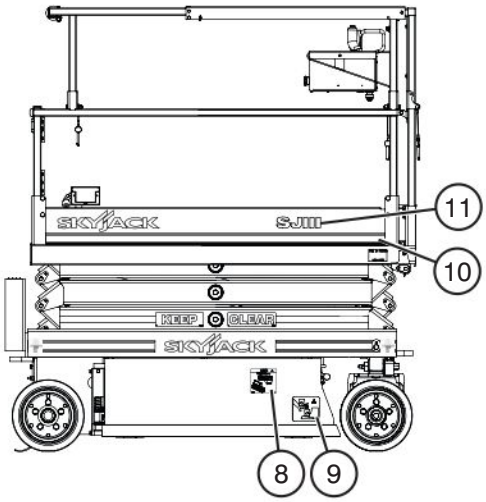

No.	Label Pictorial	Description
8		**Battery Spacers*** Place spacers only as shown in diagram. *Spacers vary over different aerial platforms.
9		**Crushing Hazard** Danger - Crushing hazard
10		**Tape Blue/White** Skyjack pinstripe
11	**SJIII 3215**	**Model Number*** Product Identifier *Model number will vary, may not be as shown.

Labels and Nameplates - Models 3215 & 3219

Front Side

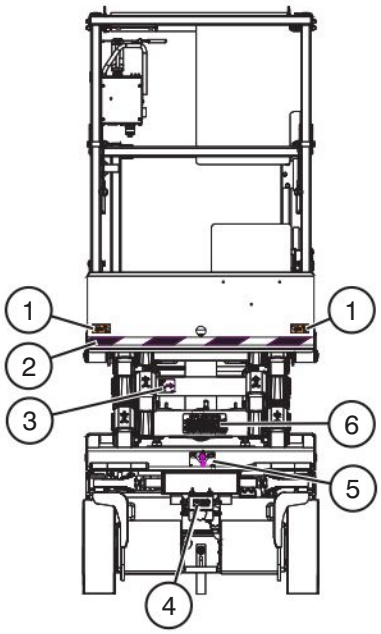

No.	Label Pictorial	Description
1		**Crushing Hazard** Danger - Crushing hazard
2		**Caution Tape Stripe** Caution stripe
3	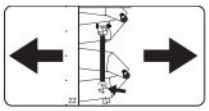	**Maintenance Support** Deploy maintenance support here.
4	Free wheeling valve	**Free-wheeling Valve** Open valve to initiate free wheeling prior to winching/towing/pushing.
5		**Lift and Tie Down Points** Only use these points for lifting or tying down.
6		**Emergency Lowering Procedure** In case of emergency, follow procedure outlined in label to lower the platform.

Labels and Nameplates - Models 3215 & 3219

Left Side

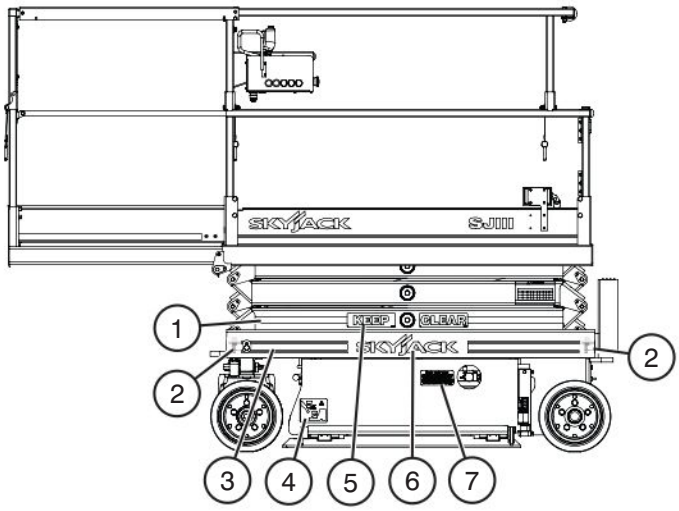

No.	Label Pictorial	Description
1		**Caution Tape Stripe** Caution stripe
2		**Wheel Load 570 kg/1260 lb.** Indicates rated wheel load.
3		**Tape - Red/Blue/Red** Skyjack pinstripe
4		**Crushing Hazard** Danger - Crushing hazard
5	KEEP	**“Keep”** Keep clear.
6	SKYJACK	**Skyjack Logo** Small Skyjack logo - blue and red
7		**Emergency Lowering Procedure** In case of emergency, follow procedure outlined in label to lower the platform.

Labels and Nameplates - Models 3215 & 3219

Left Side (Continued)

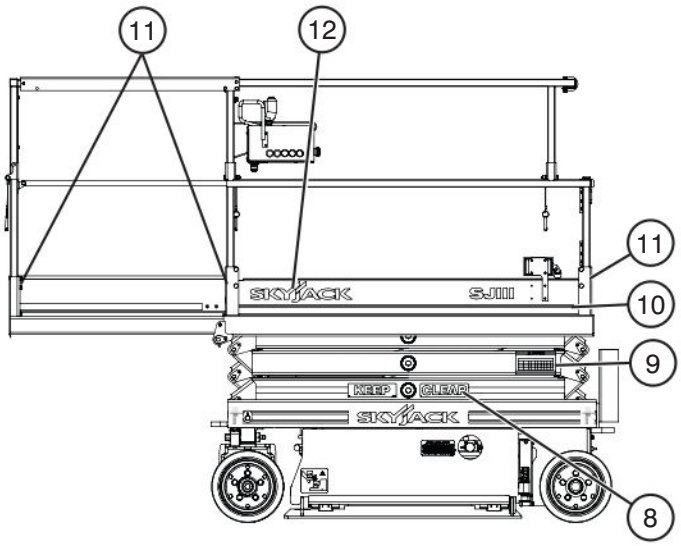

No.	Label Pictorial	Description
8	CLEAR	**"Clear"** Keep clear.
9	WARNING	**Annual Inspection** Ensure that work platform has received annual inspection prior to operation.
10		**Tape Blue/White** Skyjack pinstripe
11		**Lanyard Anchorage Point** Attach anchorage harness lanyard here.
12	SKYJACK	**Skyjack Logo** Small Skyjack logo - blue

Labels and Nameplates - Models 3215 & 3219

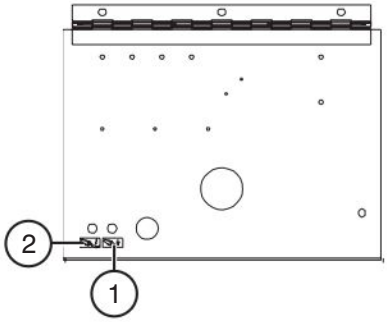

Electrical Panel

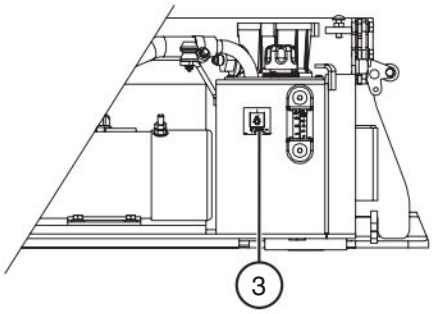

Hydraulic Tray

No.	Label Pictorial	Description
1	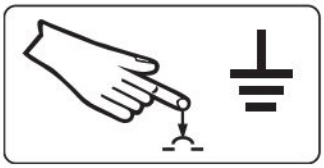	**Ground Circuit Breaker** Push to reset ground circuit breaker.
2	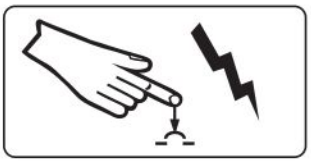	**Power Circuit Breaker** Push to reset power circuit breaker.
3		**Hydraulic Oil ATF Dexron III** Replace hydraulic fluid with ATF Dexron III only.

Labels and Nameplates - Models 3215 & 3219

Back Side

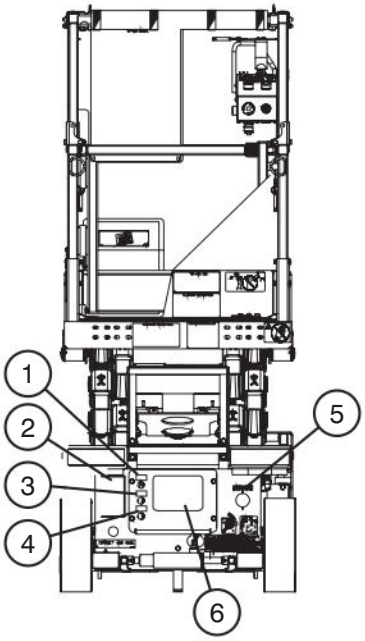

No.	Label Pictorial	Description
1		**Lower/Raise Platform** Select "↓" to lower or "↑" raise platform.
2		**Serial Plate*** Product identification and specifications *Serial plates will vary, may not be as shown.
3		**Lift Enable** Select to enable lift mode.
4		**Emergency Stop** Push to disable controls.
5	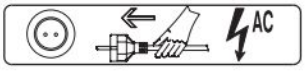	**Connect Platform AC Supply** Connect AC power supply here for platform accessory outlet.
6	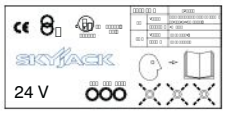	**Charger Information (24V)** Charger specification information and operation status; consult manual.

Labels and Nameplates - Models 3215 & 3219

Back Side (Continued)

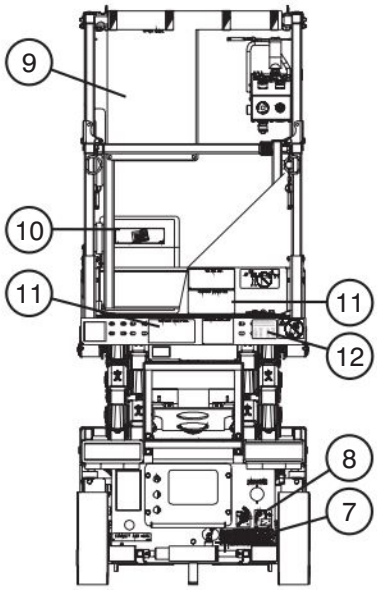

No.	Label Pictorial	Description
7		**Winching/Towing/Pushing Procedure** Winching/towing/pushing procedure. Ensure brake is released and free-wheeling valve is open before moving the unit manually.
8		**Main Power Disconnect** Rotate clockwise to turn on main power; rotate counterclockwise to turn off main power; insert padlock to lock in position.
9		**Hazard Identification** Read and understand the outlined risks associated with this work platform prior to operation.
10		**Manual Storage Box** Indicates location of operating manual.
11	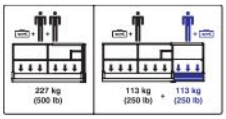 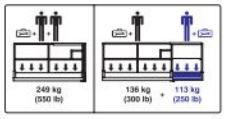 	**Platform Capacity*** Rated work load in each configuration is as shown. Rated work load includes the weight of both personnel and material. Maximum number of people in each configuration is as shown. Do not exceed total weight or maximum number of people. Load platform uniformly. *Platform capacity varies over different aerial platforms.
12		**Australian Registration** Plant design registration number

Labels and Nameplates - Models 3215 & 3219

Back Side (Continued)

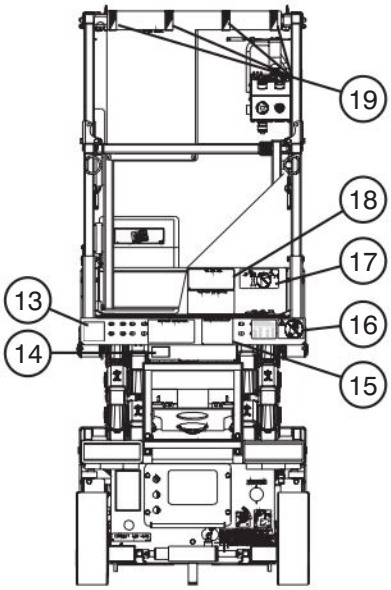

No.	Label Pictorial	Description
13		**Inverter Switch** Turn inverter switch to off position after use.
14		**Warning - Do Not Alter** Aerial platform altering warning
15		**Operator Checklist** Operator checklist. Perform check prior to use.
16		**No Jewelry** Caution - Do not wear jewelry.
17	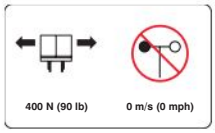	**Horizontal Load Rating*** Apply no more than the indicated side load. Operate below indicated wind speed only. *Horizontal load rating will vary, may not be as shown.
18		**Standards Compliance** Indicates standards to which the work platform complies.
19		**Caution Tape Stripe** Caution stripe

Labels and Nameplates - Models 3215 & 3219

Top Side

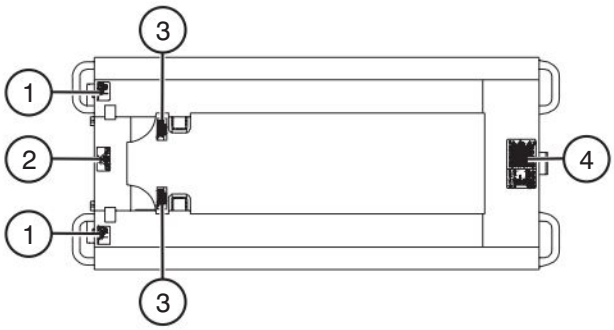

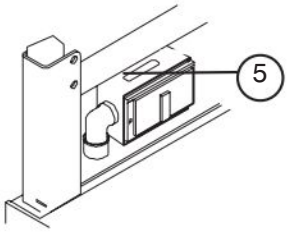

Outlet Box

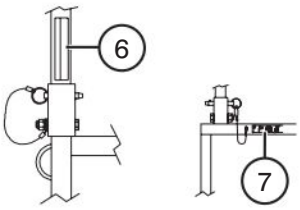

Railing Pins

No.	Label Pictorial	Description
1	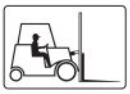	**Forklift Pocket** Insert fork fully into pocket to lift aerial platform.
2		**Lift and Tie Down Points** Only use these points for lifting or tying down.
3		**Warning - Do Not Alter** Aerial platform altering warning
4		**Maintenance Support** Instructions on use on maintenance support
5	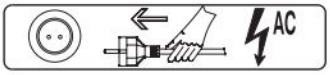	**Connect Platform AC Supply** Connect AC power supply here for platform accessory outlet.
6		**Falling Hazard - Railing Pins (Vertical)** WARNING! Falling Hazard. Make sure hinged railing is pinned properly.
7		**Falling Hazard - Railing Pins (Horizontal)** WARNING! Falling Hazard. Make sure hinged railing is pinned properly.

Labels and Nameplates - Models 3215 & 3219

Platform Control Console

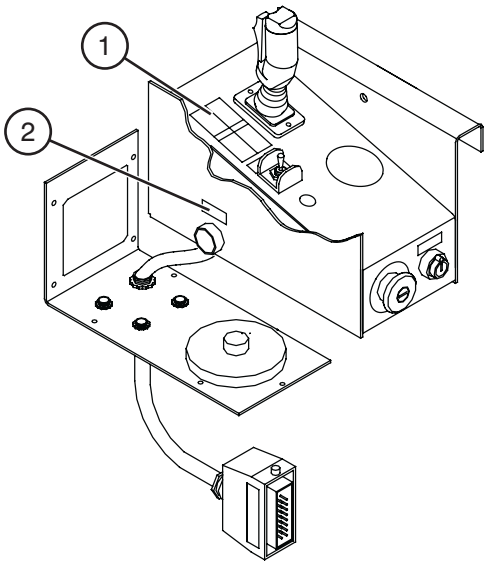

No.	Label Pictorial	Description
1	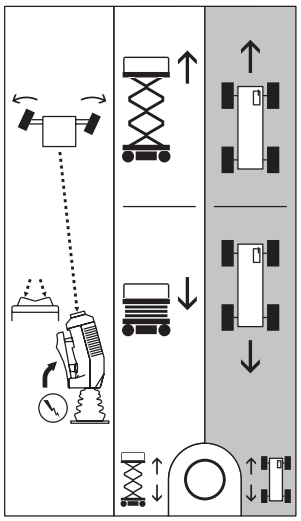	**Controller Operation** Squeeze "" trigger to enable controller. Operate "" rocker switch to steer. Move controller handle forward to "" raise or backward to "" lower platform. Move controller handle "" forward to drive forward or "" backward to drive reverse. Select "" lift, "" off or "" drive mode.
2		**Horn** Select to sound horn.

Labels and Nameplates - Models 3215 & 3219

Platform Control Console (Continued)

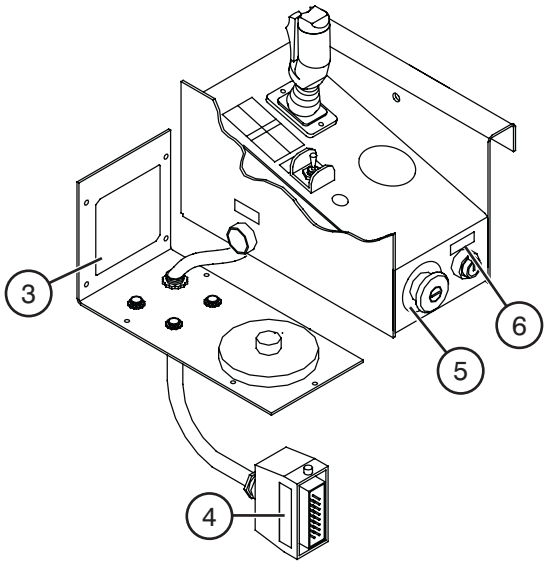

No.	Label Pictorial	Description
3	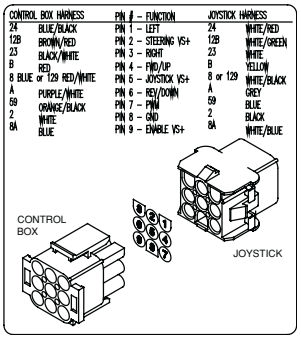	**Controller Connector Pinout (SJIII Compacts)** Controller connector pinout
4	HYDRAULIC PROPORTIONAL	**Hydraulic Proportional** Control box is suitable for use on hydraulic proportional aerial platforms.
5	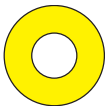	**Emergency Stop** Push to disable controls.
6	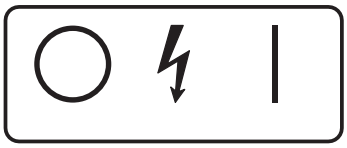	**Off/On** Select “○” off or “I” on.

Labels and Nameplates - Models 3220, 3226, 46xx & 68xx

Right Side

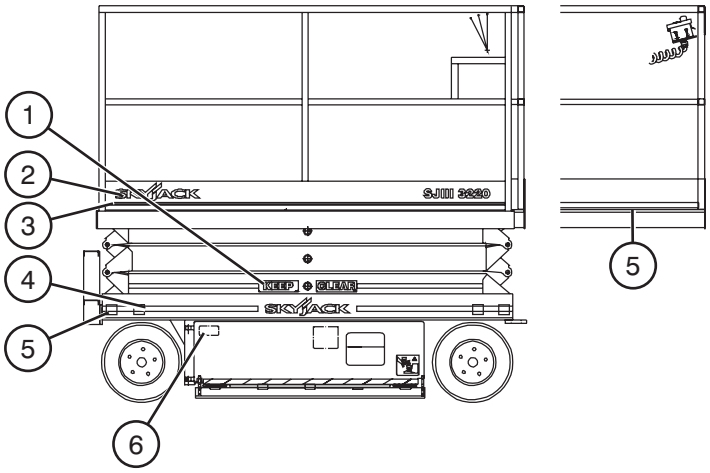

No.	Label Pictorial	Description
1	KEEP	**"Keep"** Keep clear.
2	SKYJACK	**Skyjack Logo** Small Skyjack logo - blue
3		**Tape Blue/White** Skyjack pinstripe
4		**Tape - Red/Blue/Red** Skyjack pinstripe
5		**Wheel Load 820 kg/1800 lb.*** Indicates rated wheel load. *Wheel load will vary with each model.
6	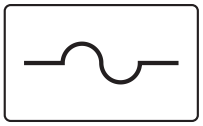	**Fuse** Fuse location

Labels and Nameplates - Models 3220, 3226, 46xx & 68xx

Right Side (Continued)

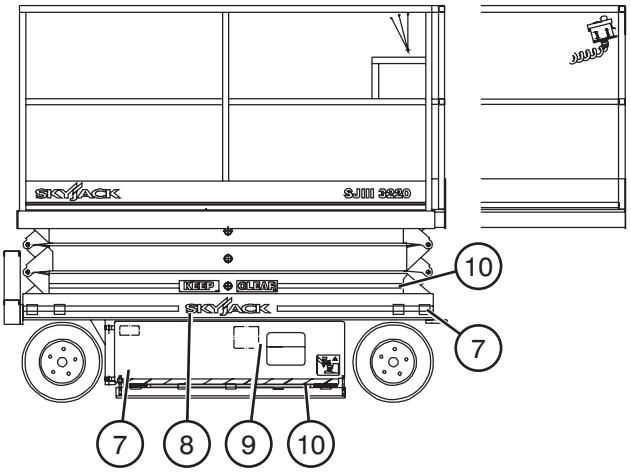

No.	Label Pictorial	Description
7		**Crushing Hazard** Danger - Crushing hazard
8	SKYJACK	**Skyjack Logo** Small Skyjack logo - blue and red
9	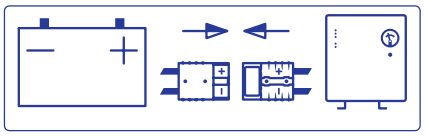	**Battery - Charger Connection** Connect charger to batteries at this point.
10		**Caution Tape Stripe** Caution stripe

Labels and Nameplates - Models 3220, 3226, 46xx & 68xx

Right Side (Continued)

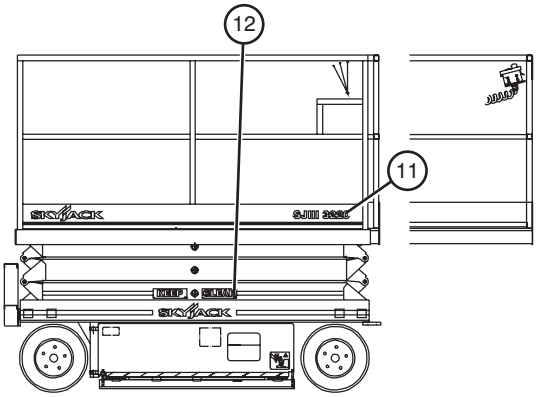

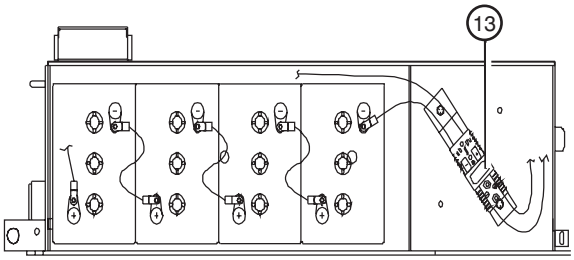

Battery Tray

No.	Label Pictorial	Description
11	SJIII 3220	**Model Number*** Product Identifier *Model number will vary, may not be as shown.
12	CLEAR	**"Clear"** Keep clear.
13	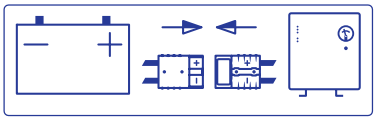	**Battery - Charger Connection** Connect charger to batteries at this point.

Labels and Nameplates - Models 3220, 3226, 46xx & 68xx

Front Side

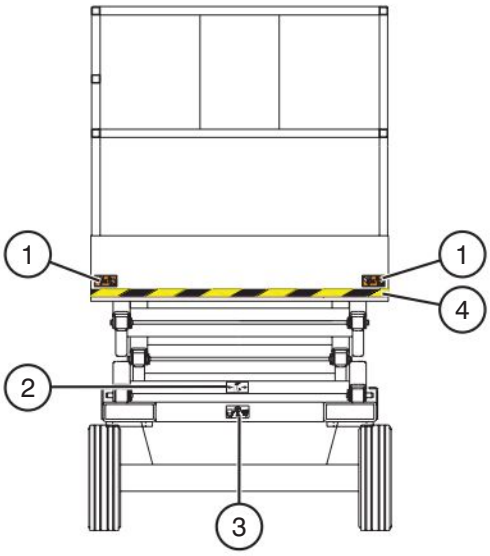

No.	Label Pictorial	Description
1		**Crushing Hazard** Danger - Crushing hazard
2	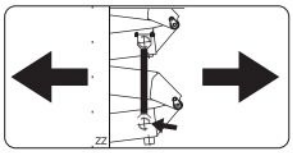	**Maintenance Support** Deploy maintenance support here.
3		**Lift and Tie Down Points** Only use these points for lifting or tying down.
4		**Caution Tape Stripe** Caution stripe

Labels and Nameplates - Models 3220, 3226, 46xx & 68xx

Left Side

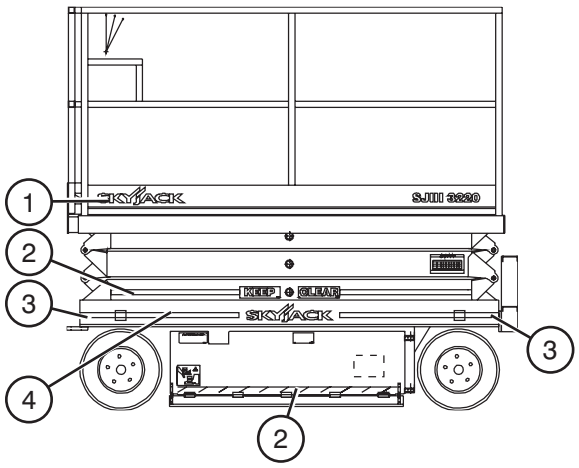

No.	Label Pictorial	Description
1	SKYJACK	**Skyjack Logo** Small Skyjack logo - blue
2		**Caution Tape Stripe** Caution stripe
3	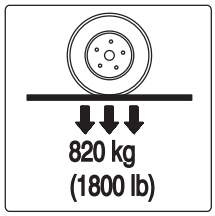	**Wheel Load 820 kg/1800 lb.*** Indicates rated wheel load. *Wheel load will vary with each model.
4		**Tape - Red/Blue/Red** Skyjack pinstripe

Labels and Nameplates - Models 3220, 3226, 46xx & 68xx

Left Side (Continued)

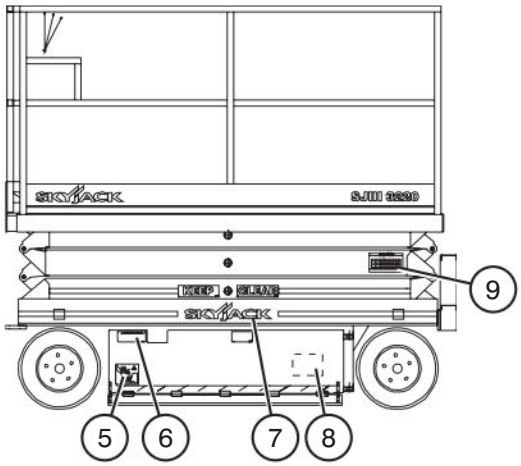

No.	Label Pictorial	Description
5		**Crushing Hazard** Danger - Crushing hazard
6	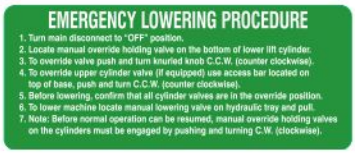	**Emergency Lowering Procedure** In case of emergency, follow procedure outlined in label to lower the platform.
7		**Skyjack Logo** Small Skyjack logo - blue and red
8		**Hydraulic Oil ATF Dexron III** Replace hydraulic fluid with ATF Dexron III only.
9		**Annual Inspection** Ensure that work platform has received annual inspection prior to operation.

Labels and Nameplates - Models 3220, 3226, 46xx & 68xx

Left Side (Continued)

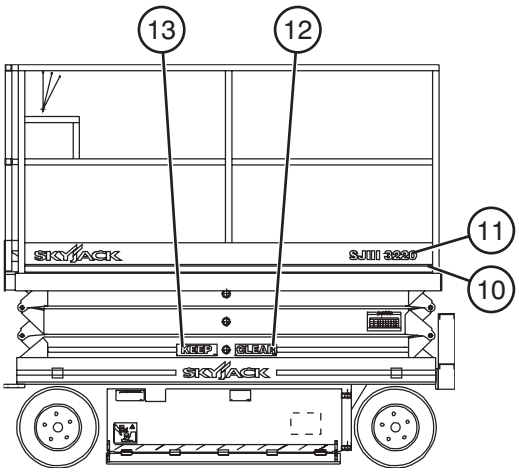

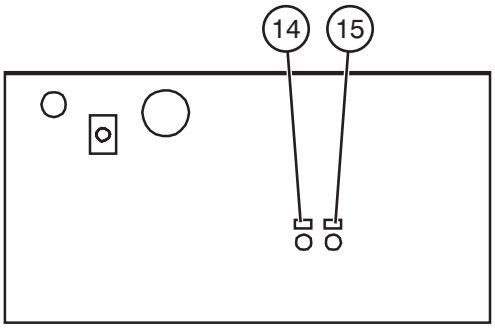

Electrical Panel

No.	Label Pictorial	Description
10		**Tape Blue/White** Skyjack pinstripe
11	SJIII 3220	**Model Number*** Product Identifier *Model number will vary, may not be as shown.
12	CLEAR	**"Clear"** Keep clear.
13	KEEP	**"Keep"** Keep clear.
14	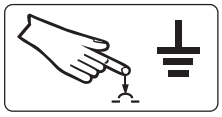	**Ground Circuit Breaker** Push to reset ground circuit breaker.
15	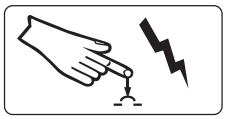	**Power Circuit Breaker** Push to reset power circuit breaker.

Labels and Nameplates - Models 3220, 3226, 46xx & 68xx

Back Side

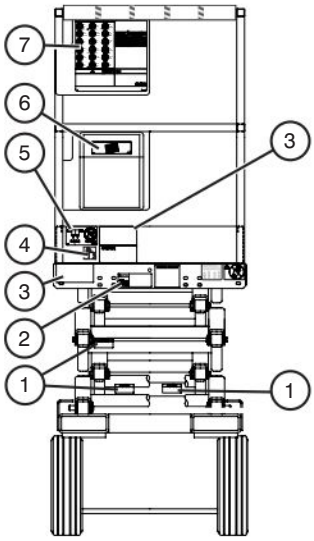

No.	Label Pictorial	Description
1		**Warning - Do Not Alter** Aerial platform altering warning
2		**Winching/Towing/Pushing Procedure** Winching/towing/pushing procedure. Ensure brake is released and free-wheeling valve is open before moving the aerial platform manually.
3	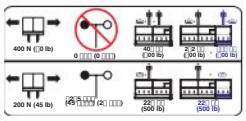	**Platform Capacity*** Rated work load in each configuration *Platform capacity varies over different aerial platforms.
4		**Lanyard Anchorage Point** Attach anchorage harness lanyard here.
5	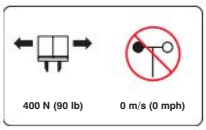	**Horizontal Load Rating*** Apply no more than the indicated side load. Operate below indicated wind speed only. *Horizontal load rating will vary, may not be as shown.
6		**Manual Storage Box** Indicates location of operating manual.
7		**Hazard Identification** Read and understand the outlined risks associated with this work platform prior to operation.

Labels and Nameplates - Models 3220, 3226, 46xx & 68xx

Back Side (Continued)

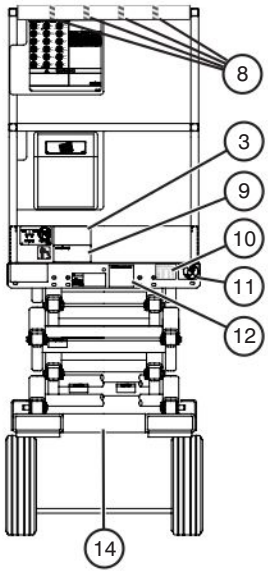

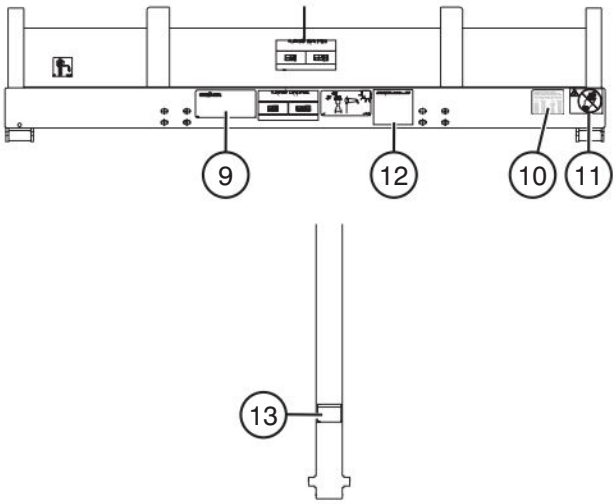

Cylinder

No.	Label Pictorial	Description
8		**Caution Tape Stripe** Caution stripe
9		**Standards Compliance** Indicates standards to which the work platform complies.
10		**Australian Registration** Plant design registration number
11		**No Jewelry** Caution - Do not wear jewelry.
12		**Operator Checklist** Operator checklist. Perform check prior to use.
13	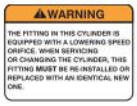	**Orifice Installed** Orifice installation warning
14	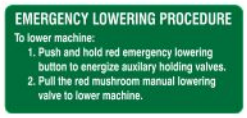	**Emergency Lowering Procedure** In case of emergency, follow procedure outlined in label to lower the platform.

Labels and Nameplates - Models 3220, 3226, 46xx & 68xx

Back Side (Continued)

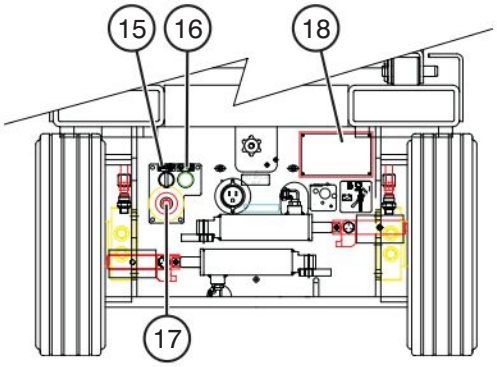

Back (Models 3220 & 3226)

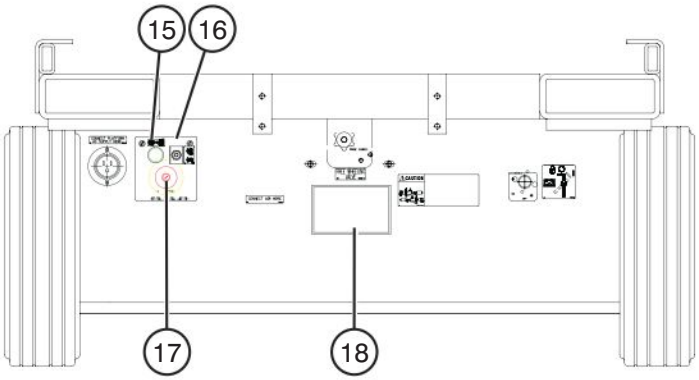

Back (Models 46xx)

Back (Models 68xx)

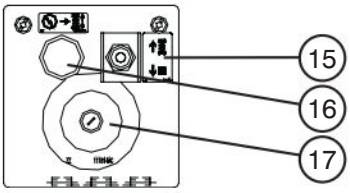

No.	Label Pictorial	Description
15	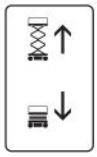	**Lower/Raise Platform** Select "↓" to lower or "↑" raise platform.
16	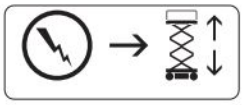	**Lift Enable** Select to enable lift mode.
17	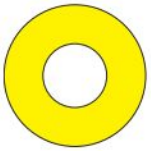	**Emergency Stop** Push to disable controls.
18	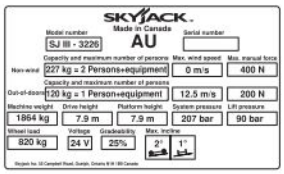 SKYJACK. Made in Canada AU Model number SJ III - 3226 Serial number Capacity and maximum number of persons Max. wind speed Max. manual force Non-wind 227 kg = 2 Persons+equipment 0 m/s 400 N Capacity and maximum number of persons Out-of-doors 120 kg = 1 Person+equipment 12.5 m/s 200 N Machine weight Drive height Platform height System pressure Lift pressure 1864 kg 7.9 m 7.9 m 207 bar 90 bar Wheel load Voltage Gradeability Max. incline 820 kg 24 V 25% 2° 1°	**Serial Plate*** Product identification and specifications *Serial plates will vary, may not be as shown.

Labels and Nameplates - Models 3220, 3226, 46xx & 68xx

Back Side (Continued)

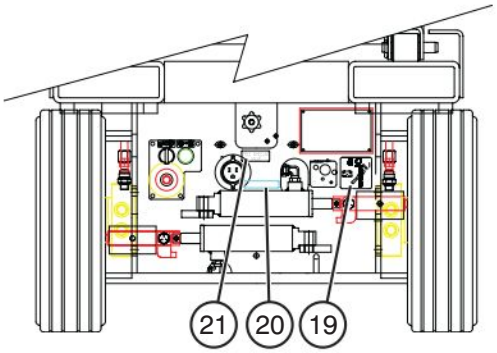

Back (Models 3220 & 3226)

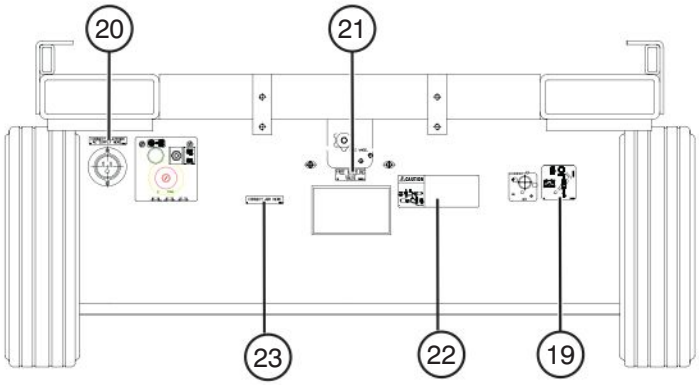

Back (Models 46xx)

No.	Label Pictorial	Description
19		**Main Power Disconnect** Rotate clockwise to turn on main power, rotate counterclockwise to turn off main power, insert padlock to lock in position.
20	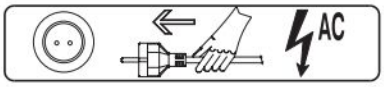	**Connect Platform AC Supply** Connect AC power supply here for platform accessory outlet.
21	Free wheeling valve	**Free-wheeling Valve** Open valve to initiate free wheeling prior to winching/towing/pushing.
22		**Winching/Towing/Pushing Procedure** Winching/towing/pushing procedure. Ensure brake is released and free-wheeling valve is open before moving the aerial platform manually.
23	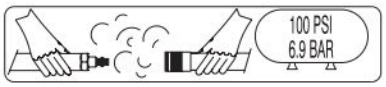	**Connect Air Supply** Connect platform air supply here.

Labels and Nameplates - Models 3220, 3226, 46xx & 68xx

Top View

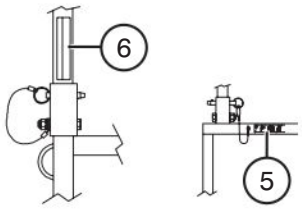

Railing Pins

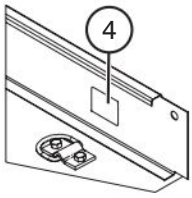

Platform

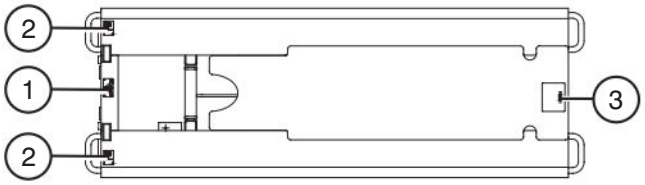

No.	Label Pictorial	Description
1		**Lift and Tie Down Points** Only use these points for lifting or tying down.
2	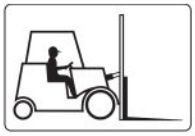	**Forklift Pocket** Insert fork fully into pocket to lift aerial platform.
3	 DANGER CRUSHING HAZARD PROPER USE OF SAFETY BAR TO STORE SAFETY BAR	**Maintenance Support** Instructions on use on maintenance support
4		**Lanyard Anchorage Point** Attach anchorage harness lanyard here.
5		**Falling Hazard - Railing Pins (Horizontal)** WARNING! Falling Hazard. Make sure hinged railing is pinned properly.
6		**Falling Hazard - Railing Pins (Vertical)** WARNING! Falling Hazard. Make sure hinged railing is pinned properly.

Labels and Nameplates - Models 3220, 3226, 46xx & 68xx

Platform Control Console

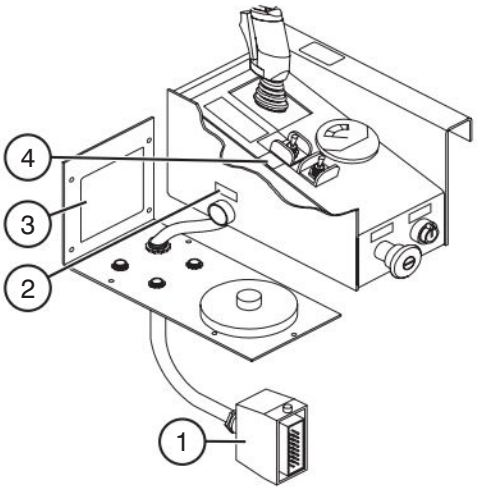

No.	Label Pictorial	Description
1	HYDRAULIC PROPORTIONAL	**Hydraulic Proportional** Control box is suitable for use on hydraulic proportional aerial platforms.
2		**Horn** Select to sound horn.
3	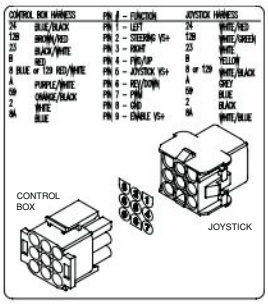	**Joystick Connector Pinout (SJIII Compacts)** Joystick connector pinout
4		**Torque High/Low (If Equipped)** Select "🐢" for high torque (low speed) or "🐇" low torque (high speed).

Labels and Nameplates - Models 3220, 3226, 46xx & 68xx

Platform Control Console (Continued)

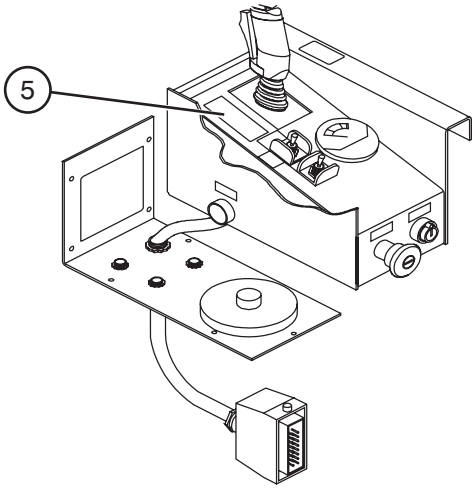

No.	Label Pictorial	Description
5	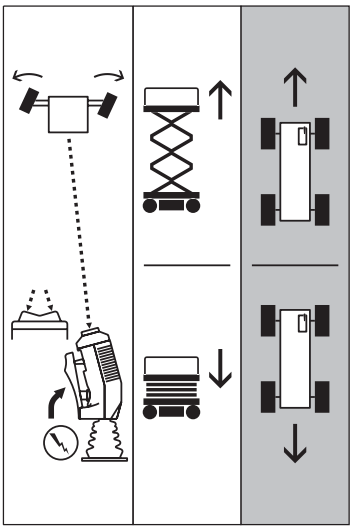	**Controller Operation** Squeeze "" trigger to enable controller. Operate "" rocker switch to steer. Move controller handle forward to "" raise or backward to "" lower platform. Move controller handle "" forward to drive forward or "" backward to drive reverse.

Labels and Nameplates - Models 3220, 3226, 46xx & 68xx

Platform Control Console (Continued)

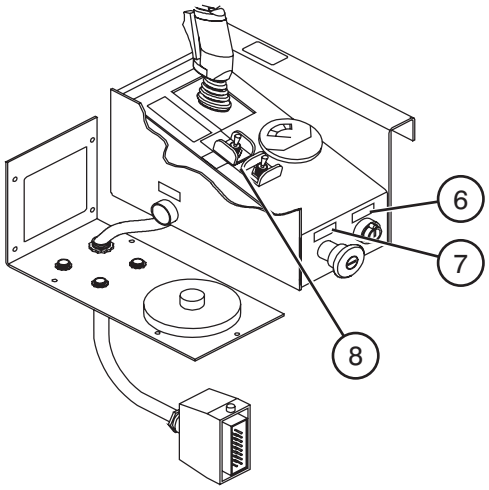

No.	Label Pictorial	Description
6		**Off/On** Select "○" off or "I" on.
7	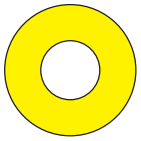	**Emergency Stop** Push to disable controls.
8	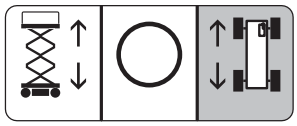	**Lift/Off/Drive** Select "↑↓" to enable lift, "○" off or "↑↓" drive mode.

Labels and Nameplates - Models 3220, 3226, 46xx & 68xx

Control Box - Powered Extension Platform

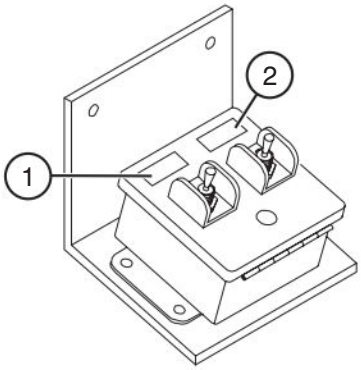

Cross Member - 1st Level Inside Scissors

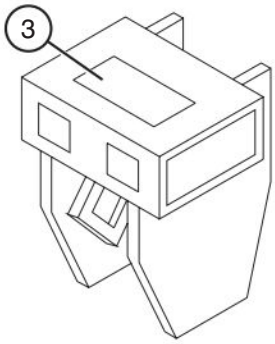

No.	Label Pictorial	Description
1	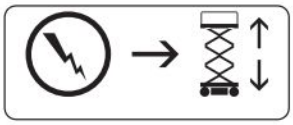	**Lift Enable** Select to enable lift mode.
2	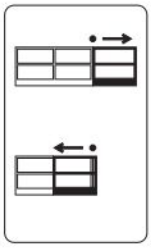	**Powered Extension Platform Extend/Retract** Select " " to extend or " " retract powered extension platform.
3	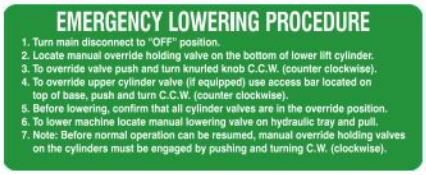 EMERGENCY LOWERING PROCEDURE 1. Turn main disconnect to "OFF" position. 2. Locate manual override holding valve on the bottom of lower lift cylinder. 3. To override valve push and turn knurled knob C.C.W. (counter clockwise). 4. To override upper cylinder valve (if equipped) use access bar located on top of base, push and turn C.C.W. (counter clockwise). 5. Before lowering, confirm that all cylinder valves are in the override position. 6. To lower machine locate manual lowering valve on hydraulic tray and pull. 7. Note: Before normal operation can be resumed, manual override holding valves on the cylinders must be engaged by pushing and turning C.W. (clockwise).	**Emergency Lowering Procedure** In case of emergency, follow procedure outlined in label to lower the platform.

MOBILE ELEVATING PLATFORMS

www.skyjack.com