THE GUIDE
Vol. 12

ice

DICE COLLECTION



internationalcatering.com.au

"Don't watch the clock; do what it does. Keep going." ***- Sam Levenson***

"The secret of getting ahead is getting started." ***- Mark Twain***

"Motivation will almost always beat mere talent." ***- Norman Ralph Augustine***

"I attribute my success to this: I never gave or took any excuse." ***- Florence Nightengale***

"Well done is better than well said." ***- Benjamin Franklin***

"You miss 100% of the shots you don't take." ***- Wayne Gretzky***

"A goal is a dream with a deadline." ***- Napolean Hill***

"If you're offered a seat on a rocket ship, don't ask what seat! Just get on." ***- Sheryl Sandberg***

"You can't build a reputation on what you are going to do." ***- Henry Ford***

"Fall down seven times and stand up eight." ***– Proverb***

"Success is never final. Failure is never fatal. It is courage that counts." ***- Winston Churchill***

"There is little success where there is little laughter." ***- Andrew Carnegie***

"We cannot solve our problems with the same thinking we used when we created them." ***-Albert Einstein***



Introduction

With over 18 years of experience in the Australian market, ICE is the proud provider of superior quality, good value, commercial products, to the commercial kitchen industry throughout Australia.

We endorse, stock and support many premium quality brands from 11 different countries. These brands carry fully recognised international warranties, which are backed by our significant investment in spare parts and accessories. By using our well established national dealer network, we are able to offer national supply of equipment and spare parts within a maximum of 5 working days to any city in Australia.

Sales

Our experienced and knowledgeable sales team are able to assist you with all product related enquiries. Our showroom located at our Sydney head office in Rosebery, has all our products on display. We are also able to offer live demonstrations in order to establish if a particular piece of equipment is suitable for a specific requirement.



Warehousing and logistics

All stock is stored in our Sydney warehouse, and using our well established network of courier companies, we are able to offer overnight deliveries to Canberra, Melbourne and Brisbane, and 2 day delivery times to Adelaide.

Due to the high freight costs and relatively low dollar value, we now stock the single and two door drink fridges (DFS Series) in warehouses in Adelaide, Brisbane and Melbourne. These are available for pick up with no freight charge, or can be delivered for a nominal local freight rate.

Using the catalogue



We have divided the catalogue into 7 sections, each one with its own colour coded pages, to make it easy to find a product. Products may differ slightly from the pictures in the catalogue. Outputs and capacities given are generally the maximum possible, and these can vary depending on operating circumstances.

Dimensions





All dimensions are listed in order of width, depth and height. While every effort is made to ensure that dimensions are accurate, errors can occur, or suppliers could change their specifications. For products where fabrication is required, we suggest you contact our office to confirm dimensions, or request the CAD drawing which is now available for most products.

New Products



We have added a few new products to compliment the range we offer. These are highlighted in the book and a few of them are shown on the right. Our new glass door, stainless steel body, fridge and freezer from Inomak are an exciting addition and very competitively priced.

INDEX

SECTION 1 *Countertop Cooking Equipment*

Panini Press Single, Double, Ribbed & Smooth	ANVIL AXIS	4
Conveyor Toasters	ANVIL AXIS	4
Conveyor Pizza Oven	ANVIL APEX	5
Griddle Plates	ANVIL AXIS	5
Sandwich Press Electric	ANVIL AXIS	5
Fryers	ANVIL AXIS	6
Waffle Bakers	ANVIL AXIS	6
Induction Cookers	ANVIL ALTO	7
Induction Warmer	ANVIL ALTO	7
Convection Ovens	ANVIL AXIS	8
Convection Oven	ANVIL APEX	8
Proving Cabinet	ANVIL APEX	8
Pizza Oven	ANVIL AXIS	8
Stands for Ovens	ANVIL AXIS	9
Chicken Rotisserie	ANVIL APEX	9
Stove Top Electric	ANVIL AXIS	9
Heat Lamps		10 + 11
Salamander	ANVIL AXIS	12
Pie Warmers	ANVIL AIRE	12
Multi Function Warmer	ANVIL AXIS	12

SECTION 2 *Food Preparation*

Slicers	RHENINGHAUS	13
Spiral Mixers	MECNOSUD	14
Fork Mixers	MECNOSUD	15
Pastry Sheeter	MECNOSUD	15
Dough Rollers	MECNOSUD	16
Mincers & Tomato Squeezer	TRE SPADE	17
Heavy Duty Mincer	ANVIL ALTO	17
Food Processor	ANVIL ALTO	18
Planetary Mixers	ANVIL ALTO	19
Cutters	NEMCO	20-21
Sausage Fillers	TRE SPADE	22
Citrus Juicer	SKYMSEN	22
Tilting Blender	SKYMSEN	22
Biltong Cabinets	BUTCHERQUIP	23
Benchtop Dehydrator	TRE SPADE	23

SECTION 3 *Blenders*

Rio Bar Blender – Polycarbonate	HAMILTON BEACH	24
Rio Bar Blender – Stainless Steel	HAMILTON BEACH	24
Tempest Ice Blender	HAMILTON BEACH	24
Tempest Food Blender	HAMILTON BEACH	24
Eclipse Blender	HAMILTON BEACH	25
Summit Blender	HAMILTON BEACH	25
Spare Jugs	HAMILTON BEACH	25
Quiet Shield	HAMILTON BEACH	25
Milkshake Mixers	HAMILTON BEACH	26
Cream Guns		27
Cream Chargers		27
Soda Chargers		27
Cream Gun Spare Parts		27

SECTION 4 *Trolleys*

Trolley Stainless Steel 28
Grill Scrapers 29
Tapware 29

SECTION 5 *Ware Washing*

Undercounter Glass Washer ..... ADLER 30
Undercounter Dishwasher ..... ADLER 30
Passthrough Dishwasher ..... ADLER 31
Undercounter Top Line ..... ADLER 31

SECTION 6 *Refrigeration*

Upright Stainless Steel Split Door Refrigerator ..... SALTAS 32
Upright Stainless Steel Split Door Freezer ..... SALTAS 33
Undercounter Fridges ..... SALTAS 34
Undercounter Freezers ..... SALTAS 35
Upright Glass Door Refrigerator ..... SALTAS 36
Refrigerated Ingredient Unit ..... SALTAS 37
Granita Machines ..... ANVIL AIRE 37
Blast Chillers ..... EVERLASTING 38-39
Dry Ageing Cabinet ..... EVERLASTING 40
Gelato Storage Cabinet ..... EVERLASTING 41
Retarder Prover ..... EVERLASTING 41
Upright Fridges Single & Double Door ..... INOMAK 42
Upright Freezers Single & Double Door ..... INOMAK 43
Patisserie Kit ..... INOMAK 43
Glass Door Fridges ..... INOMAK 44
Glass Door Freezers ..... INOMAK 45
Display Fridges & Freezers Single & Double Door ..... ANVIL AIRE 46
Display Fridges and Freezers Triple Door ..... ANVIL AIRE 47
Underbar Drawer Fridges ..... INOMAK 47
Underbars, Glass & Steel Doors ..... ANVIL AIRE 48
Pizza Bars ..... ANVIL AIRE 49
Additional Shelves for Underbars ..... ANVIL AIRE 49
Castors for Underbars & Pizza Bars 49
Under Bench Fridges & Freezers (single doors) ..... ANVIL AIRE 50
Countertop Ingredient Fridge ..... TECHNOCRIO 51
Countertop Ice Cream Freezer ..... TECHNOCRIO 51
Sushi Display 51
Cake Display Hot & Cold Vertical ..... ANVIL AIRE 52
Cake Display Hot & Cold Curved ..... ANVIL AIRE 53
Cake Display Hot & Cold (1350mm High) ..... ANVIL AIRE 54
Juice Dispensers ..... ANVIL AIRE 54
Cake Display 4 Tier Cold Vertical (1500mm High) ..... ANVIL AIRE 55
Countertop Showcase Hot & Cold ..... ANVIL AIRE 55-56
Ice Cream Machines ..... MUSSO 57

SECTION 7 *Vacuum Sealers & Bags*

Vacuum Sealers ..... ORVED 58-60
Vacuum Bags ..... ORVED 60

PANINI PRESS

	Model	Product Description	Voltage	Power	Unit Size (mm)	Kg	List Price excl GST
 CHINA	TSS2000	Panini Press – Single ribbed top / flat bottom • Manufacturer Code: GH-811PD-MKS	240V	2.2kW	410 x 378 x 205 including handle	22kg	$ 495.00
	TSS2001	Panini Press – Single flat top / flat bottom • Cooking surface 340mm x 225mm • Manufacturer Code: GH-811PB-MKS	240V	2.2kW	410 x 378 x 205 including handle	22kg	$ 495.00
 CHI NA	TSS3000	Panini Press – Double ribbed top / flat bottom • Cooking surface 480mm x 225mm • Independent heat controls for each side • Spring loaded top plate to suit any food thickness • Heat resistant handle • Heavy duty cast iron plates • Self balancing top plate • Stainless steel body • Thermostatically controlled heat up to 300˚C • Removable drip tray • Height clearance when open 520mm • Manufacturer Code: GH-813C-MKS	240V	3.08kW 15A	570 x 378 x 205 including handle	35kg	$ 895.00
	TSS3001	Panini Press – Double flat top / flat bottom • Manufacturer Code: GH-813D-MKS	240V	3.08kW 15A	570 x 378 x 205 including handle	35kg	$ 895.00

CONVEYOR TOASTER

NEW!  CHINA	CTK0001	Conveyor Toaster 2 Slice • Ideal for breakfast buffets, coffee shop, take-aways, etc • Front and rear discharge chutes • 85mm usable height above conveyor • 250mm wide conveyor • Adjustable belt speed • Standby function for energy saving • Manufacturer Code: CTK0001	240V	2.2kW	367 x 761 x 424	17kg	$ 850.00
NEW!  CHINA	CTK0002	Conveyor Toaster 3 Slice • Ideal for breakfast buffets, coffee shop, take-aways, etc • Front and rear discharge chutes • 85mm usable height above conveyor • 250mm wide conveyor • Adjustable belt speed • Standby function for energy saving • Manufacturer Code: CTK0002	240V	2.2kW	474 x 769 x 428	18kg	$ 1295.00

Extended Gold Star Warranty – 2 year parts, 1 year labour.

SANDWICH PRESS

	Model	Product Description	Voltage	Power	Unit Size (mm)	Kg	List Price excl GST
 SOUTH AFRICA	TSA1009	Sandwich Press Flat Plate • Cast aluminium plates • For toasted sandwiches • Can be used for grilling burgers, tomatoes, etc • Cooking surface: 330 x 355mm • Adjustable lid prevents squashing of thick sandwiches and foccacias • Manufacturer Code: TSA1309-ICE	240V	2.2kW	355 x 466 x 327	14kg	$ 495.00

CONVEYOR PIZZA OVEN

ANVIL APEX

 CHINA	POK0003	Conveyor Pizza Oven • Maximum temperature 300˚C • Full digital controls for heat and speed • Perfect for pizza, defrosting ready made food, reheating, etc • Powerful cooling fan to help aid exterior surface cooling • Heavy duty 350mm wide stainless steel conveyor belt • Clearance height max. 70mm • Switch between right to left or left to right operation • Manufacturer Code: HX-15 (1PH)	240V	6.3kW 28 Amp	1499 x 575 x 435	54kg	$2,795.00
	POK0004	• 3-phase version • Manufacturer Code: HX-15 (3PH)	400V/3ph	9.3Amp/Ph	1499 x 575 x 435	54kg	$2,795.00

Both models supplied without plug. Needs to be installed by an electrician.

GRIDDLE PLATE ELECTRIC

 SOUTH AFRICA	FTA0400	Griddle Flat Top 400mm • High output for busy kitchens • Heavy duty 10mm thick cooking surface for high heat retention • Fast start-up to cooking temperatures • Maintenance is easier with bottom-mounted grease collection pan • Top splash guard protects against kitchen “wear & tear” • Griddle plate is fully welded to base • Cooking surface: 355 x 420mm • Manufacturer Code: FTA0400-ICE	240V	2kW	373 x 532 x 241	20kg	$ 395.00
 SOUTH AFRICA	FTA0600	Griddle Flat Top 600mm • High output for busy kitchens • Heavy duty 10mm thick cooking surface for high heat retention • Fast start-up to cooking temperatures • Maintenance is easier with bottom-mounted grease collection pan • Top splash guard protects against kitchen “wear & tear” • Griddle plate is fully welded to base • Cooking surface: 610 x 420mm • Manufacturer Code: FTA0600-ICE	240V	3kW 15 Amp	623 x 532 x 241	32kg	$ 580.00

Extended Gold Star Warranty – 2 year parts, 1 year labour.

FRYER DEEP FAT ELECTRIC

	Model	Product Description	Voltage	Power	Unit Size (mm)	Kg	List Price excl GST
 SOUTH AFRICA	FFA0001	Fryer Deep Fat Single Pan • Reset switch and extra safety thermostat • Hinged element box for easy lifting of elements • Removable stainless steel tank with carrying handles for easy cleaning • 5lt oil capacity • Complete with night lid • Manufacturer Code: FFA2001-ICE	240V	2.4kW	282 x 470 x 278	7kg	$ 345.00
 SOUTH AFRICA	FFA0002	Fryer Deep Fat Double Pan • Reset switch and extra safety thermostat • Hinged element box for easy lifting of elements • Removable stainless steel tank with carrying handles for easy cleaning • Allows for separation of foods and allows flexible and economical use. i.e. use both pans when busy and only one when quiet • 2 x 5lt oil capacity • Complete with night lids • Manufacturer Code: FFA2002-ICE	240V	2 x 2.4kW	573 x 470 x 278	12kg	$ 690.00

WAFFLE BAKERS

 CHINA	WBA1001	Waffle Baker – Belgian Single • 2 x 500w high power heating elements • Programmable heat and time settings • Stainless steel construction • Digital display • Timer alarm with buzzer • 180˚ Rotating plates • Manufacturer Code: WB-03	240V	1kW	255 x 515 x 286	8kg	$ 895.00
 CHINA	WBA1002	Waffle Baker – Belgian Double • 4 x 500w high power heating elements • Programmable heat and time settings • Stainless steel construction • Digital display • Timer alarm with buzzer • 180˚ Rotating plates • Manufacturer Code: WB-03-2	240V	2kW	520 x 530 x 286	17kg	$1695.00

INDUCTION COOKER

	Model	Product Description	Voltage	Power	Unit Size (mm)	Kg	List Price excl GST
 CHINA	ICK3500	Schott Ceran - German Glass Top • Cooking circle: 250mm • Temp. range: 60°C - 240°C • Electronic overheat protection • Suitable for any magnetic based cooking pots • Instant heat saves power during quiet periods • Timer, LED Display (0-180 mins) • Manufacturer Code: IC-350B-BT(003)	240V	3.1kW 15A	375 x 420 x 172	7.5kg	$ 450.00

INDUCTION WARMER/COOKER

 CHINA	ICW2000	Induction Warmer/Cooker, 2kW (10amp) • Perfect for use in place of chaffing fuel. For use with chaffing dishes, for chocolate tempering, keeping sauces warm or any other warming application • Schott Ceran hob • Stainless steel framed body • Touch control, safety lock • Timer, LED display (0-180 minutes) • 1-10 power levels • 1-10 temperature setting • Temperature range: 60˚C-240˚C • Electronic overheating protection • Manufacturer Code: IDC-SC2000	240V	0.5kW-2kW	330 x 383 x 66	4.5kg	$250.00

DROP IN INDUCTION WARMER/COOKER

 CHINA	ICK3501	In-Counter Induction • Powerful 3.5Kw • Temperature range 60˚-240˚C • Electoronic overheat protection • Stainless steel body and frame, metal bottom • Touch panel and control knob adjustments (below or above counter) • Manufacturer Code: IC-350TA	240V	3.5kW 15A	360 x 380 x 125 Size of cut-out 330W x 350D	7kg	$595.00

CONVECTION OVENS

	Model	Product Description	Voltage	Power	Unit Size (mm)	Kg	List Price excl GST
	COA1003	Convection Oven – Prima • 10A Ideal for caterers • 4 shelves supplied as standard • Cooking chamber size: 460 x 370 x 350mm • Shelf size: 440 x 320mm • Timer and bake function • Interior light • Heat setting: 65°C - 300°C • Dual fan system for even heat distribution • Manufacturer Code: COA1003-ICE	240V	2.4kW	595 x 622 x 590	41kg	$1200.00
 SOUTH AFRICA	COA1004	Convection Oven – Prima Pro with grill function • 10A Ideal for caterers • 4 shelves supplied as standard • Cooking chamber size: 460 x 370 x 325mm • Shelf size: 440 x 320mm • Timer, grill and bake function • Interior light • Heat setting: 65°C - 300°C • Dual fan system for even heat distribution • Grill and Bake functions cannot be used simultaneously • Manufacturer Code: COA1004-ICE	240V	2.4kW	595 x 622 x 590	42kg	$1300.00
ANVIL APEX  SOUTH AFRICA	COA1005	Convection Oven – Grande Forni • 15A power • St/steel interior and exterior • Manual steam injection for humidity, which allows browning of pastry and bread products • 2 industrial heavy-duty reversing fan motors • 2-hour timer with bypass • Interior light • Cooking chamber size: 700 x 495 x 355mm • Takes 4 full size gastronorm pans or 4 baking trays (600 x 400mm) • 4 shelves supplied as standard • Manufacturer Code: COA1005-ICE	240V	3.2kW 15A	835 x 759 x 590	70kg	$2850.00

PROVING CABINET

 SOUTH AFRICA	POA0001	Proving Cabinet • Designed for use with Anvil convection ovens • Faster proving time in a humidity controlled environment • Can accommodate up to 9 x 600 x 400 baking trays or 9 x 1/1 GN Trays • Manufacturer Code: POA0001-ICE	240V	0.75kW	860 x 591 x 995	42kg	$1595.00

PIZZA OVEN

 SOUTH AFRICA	POA1001	Pizza Oven • 2 decks with ceramic tile bases • Dimensions of ceramic tile: 450 x 445 x 16mm • Clearance height each shelf: 75mm • 15 minute audible timer • Temperature 340°C maximum • Stainless steel interior and exterior • Manufacturer Code: POA1001-ICE	240V 15A	2.85kW	588 x 645 x 468	40kg	$ 1250.00

STANDS FOR OVENS

	Model	Product Description	Voltage	Power	Unit Size (mm)	Kg	List Price excl GST
 SOUTH AFRICA	COR0001	Stand for oven • Suits COA1003, COA1004 and POA1001			600 x 540 x 900		$ 350.00
	COR0005	Stand for oven • Suits COA1005 • Sturdy mild steel construction, powder coated • Takes 8 shelves • Easy assembly			845 x 650 x 900		$ 395.00

CHICKEN ROTISSERIE

 SOUTH AFRICA	CGA0008	8 Bird Chicken Rotisserie (2 birds per basket) • Full stainless steel construction • Timer fitted for controlled operation • Glass front and rear makes this a good point of sale unit • Internal light • Thermostatically controlled heating • Manufacturer Code: CGA0008-ICE	240V 15A	3kW	740 x 570 x 590	38kg	$ 1995.00

STOVE TOP ELECTRIC

	STA0001	Single Boiling Top • Plate diameter - 230mm • Manufacturer Code: STA0001-ICE	240V	2kW	333 x 508 x 225	8kg	$ 295.00
 SOUTH AFRICA	STA0002	Double Boiling Top • For hygienic boiling and simmering, 'Anvil' hot plates are built with safety in mind • Rapid heat-up time • Six stage heat switch for simmering and boiling • Rear splash guard prevents blockage of ventilation slots • Diameter of plates: Small - 190mm Large - 230mm • Manufacturer Code: STA0002-ICE	240V	3.2kW 15amp (2kW & 1.2kW)	580 x 508 x 225	12kg	$ 385.00

HEAT LAMPS

	Model	Product Description	Voltage	Power	Unit Size (mm)	Kg	List Price excl GST
 ITALY	HLS1250	Heat Lamp Henri • Modern aluminium design • Length adjustable: 60 - 130cm • Teflon coated 275w "Sylvania" globe protects food if glass shatters • Standard E27 screw in fitting globe • On/off switch on lamp shade • Shade diameter: 190mm • Manufacturer Code: 172-6010	240V	0.25kW		0.7kg	$ 450.00
 ITALY	HLS2250	Heat Lamp Bonnie • Copper finish • Specs as above (see Heat Lamp Henri) • Shade diameter: 225mm • Manufacturer Code: 172-6005	240V	0.25kW		1.1kg	$ 550.00
 ITALY	HLS3250	Heat Lamp Clyde • Chrome finish • Specs as above (see Heat Lamp Henri) • Shade diameter: 225mm • Manufacturer Code: 172-6000	240V	0.25kW		1.1kg	$ 550.00

ECONOMY MODEL HEAT LAMP

	Model	Product Description	Voltage	Power	Unit Size (mm)	Kg	List Price excl GST
 CHINA	HLK0001	Heat Lamp – Rannio • Silver grey powder coated finish • Length adjustable: 300 - 1800mm • Teflon coated 250w globe protects food if glass shatters • Standard E27 screw in fitting globe • On/off switch on lamp shade • Shade diameter: 225mm • Manufacturer Code: HLT02-S2	240V	0.25kW		0.97kg	$ 225.00

HEAT STRIP

	Model	Product Description	Voltage	Power	Unit Size (mm)	Kg	List Price excl GST
NEW!  CHINA	SLE0600	Heat Lamp • Single steel element • Coverage 220mm wide at 300mm high	240V	0.5kW	600 x 166 x 70	3kg	$ 320.00
	SLE1000	Heat Lamp	240V	1.0kW	1000 x 166 x 70	4kg	$ 350.00
	SLE1200	Heat Lamp	240V	1.1kW	1200 x 166 x 70	5kg	$ 440.00
	SLE1500	Heat Lamp	240V	1.4kW	1500 x 166 x 70	6kg	$ 480.00

HEAT & LIGHT STRIPS

	Model	Product Description	Voltage	Power	Unit Size (mm)	Kg	List Price excl GST
NEW!  CHINA	SLH0600	Heat & Light Strip • Single steel element • Halogen light source • Coverage 300mm wide at 300mm high • 1 x 100W Halogen globe	240V	0.6kW	600 x 246 x 70	kg	$ 350.00
	SLH1000	Heat & Light Strip • 2 x 100W Halogen globe	240V	1.2kW	1000 x 246 x 70	kg	$ 400.00
	SLH1200	Heat & Light Strip • 2 x 100W Halogen globe	240V	1.3kW	1200 x 246 x 70	kg	$ 480.00
	SLH1500	Heat & Light Strip • 3 x 100W Halogen globe	240V	1.7kW	1500 x 246 x 70	kg	$ 540.00

HEAT LAMPS

	Model	Product Description	Voltage	Power	Unit Size (mm)	Kg	List Price excl GST
NEW!  CHINA	HLH0320B Black HLH0320S Silver HLH0320G Gold/ Copper	**Minnie** Heat Lamp – Black, Silver or Copper • Teflon coated globe • Adjustable from 600mm to 1.3metres • Coverage 320mm at 400mm above product	240V	0.25kW	250H x 170D	0.9kg	$ 240.00
NEW!  CHINA	HLH0440B Black HLH0440S Silver HLH0440G Gold/ Copper	**Bella** Heat Lamp – Black, Silver or Copper • Teflon coated globe • Adjustable from 600mm to 1.3metres • Coverage 440mm at 400mm above product	240V	0.25kW	250H x 279D	0.9kg	$ 280.00
NEW!  CHINA	HLH0560B Black HLH0560S Silver HLH0560G Gold/ Copper	**Connie** Heat Lamp – Black, Silver or Copper • Teflon coated globe • Adjustable from 600mm to 1.3metres • Coverage 560mm at 400mm above product	240V	0.25kW	250H x 267D	0.9kg	$ 280.00
NEW!  CHINA	HLH0320R Red	**Sue** Heat Lamp – Red • Teflon coated globe • Adjustable from 600mm to 1.3metres • Coverage 320mm at 400mm above product	240V	0.25kW	250H x 170D	0.9kg	$ 240.00
	XHLH0001	Spare Teflon Coated Globe • Teflon coated 250w globe protects food if glass shatters		250W			$ 16.00

Minnie + Sue

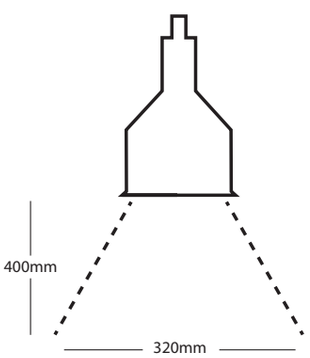

Bella

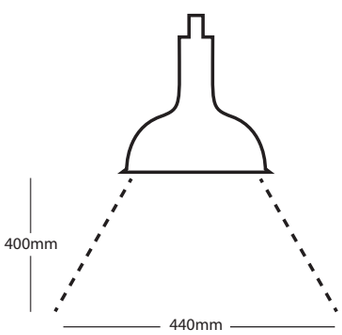

Connie

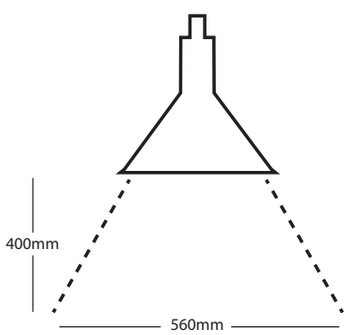

MULTI-FUNCTION WARMER

 SOUTH AFRICA	CDA1003	Chip Warmer • Top and bottom heating elements • Retains cooked food's taste and appearance • Holds 15kg chips for 15 minutes • Excellent for fast food operators • Removable interior for easy cleaning • Robust and reliable incolloy element: impervious to grease and fat • Stainless steel perforated spiked tray for use as carving station • Manufacturer Code: CDA1003-ICE	240V	1.9kW	346 x 681 x 596	16kg	$ 495.00

SALAMANDER

 CHINA	SAA0002	Adjustable Salamander • Robust st/steel construction • Ideal for defrosting, gratinating, grilling, browning, etc. • Supplied with one removable grid • Top heat only • Independent heat control of left and right hand side • Manufacturer Code: EB-600-MKSI	240V 15A	3kW	600 x 510 x 528	45kg	$ 1350.00

PIE WARMER

ANVIL AIRE

 SOUTH AFRICA	PWK0007	Pie Warmer Mini (12–18 pies) • All stainless steel construction • Supplied with three fixed shelves • Rear hinged toughened glass door • Front fixed glass window • Removable crumb tray • Humidity pan • Illuminated signage panel in front • Adjustable thermostat 30˚- 85˚C • Manufacturer Code: PWK0007-ICE	230V	0.75kW	350 x 350 x 560	13.7kg	$ 495.00
NEW!  SOUTH AFRICA	PWK1007	Pie Warmer (36–48 pies) • Ideal for Takeaways etc • Supplied with 4 shelves • Removable crumb tray • Display lighting • Humidity pan for keeping product moist • Fixed front window • Blank decal for branding sticker • Adjustable thermostat 30˚- 85˚C • Manufacturer Code: PWA1007	240V	1.5kW	453 x 503 x 644	30kg	$ 625.00

SLICERS – BELT DRIVEN

	Model	Product Description	Voltage	Power	Unit Size (mm)	Kg	List Price excl GST
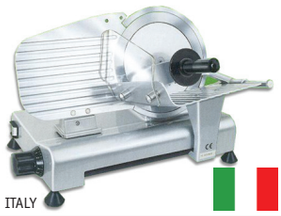 ITALY	SLL0195	Slicer 195mm Domestic • Removable sharpener • Domestic or light commercial use only • 1 year warranty for domestic use • 3 month commercial warranty • Made in Italy • Manufacturer Code: 90318	240V	0.11kW	300 x 430 x 292	11kg	$ 440.00

SLICERS – BELT DRIVEN

RHENINGHAUS®

 ITALY	SSR0220	220mm diameter blade • Designed for smaller cuts of meat • Aluminium finger guard • Easy glide sliding carriage • Built-in sharpener • Belt driven • Made in Italy • **Cut capacity: 200 x 130 x 150mm diameter** • Cut thickness: 0-15mm • Fixed ring guard for extra safety • Manufacturer Code: STT22245	240V	0.11kW	400 x 450 x 370	13kg	$ 795.00
	SSR0250	250mm diameter blade • Designed for smaller cuts of meat • Aluminium finger guard • Easy glide sliding carriage • Built-in sharpener • Belt driven • Made in Italy • **Cut capacity: 210 x 150 x 170mm diameter** • Cut thickness: 0-15mm • Fixed ring guard for extra safety • Manufacturer Code: STT25245	240V	0.15kW	420 x 520 x 370	16kg	$ 995.00
	SSR0300	300mm diameter blade • Aluminium finger guard • Easy glide sliding carriage • Built-in sharpener • Belt driven • Made in Italy • **Cut capacity: 210 x 160 x 190mm diameter** • Cut thickness: 0-15mm • Fixed ring guard for extra safety • Manufacturer Code: STT30LT245	240V	0.18kW	490 x 550 x 400	19kg	$ 1325.00

HEAVY DUTY SLICER

 ITALY	SSR1301	Belt Driven 300mm • Large heavy duty tray and sliding carriage • Powerful motor / belt driven • **Cut capacity: 240 x 160 x 190mm diameter** • Cut thickness: 0 - 20mm • Gasket against moisture • Manufacturer Code: STT30AFFCEM	240V	0.25kW	650 x 560 x 470	30kg	$2295.00

FIXED HEAD FIXED BOWL MIXER

	Model	Product Description	Voltage	Power	Unit Size (mm)	Kg	List Price excl GST
 ITALY	SMM0005	Fixed Head Fixed Bowl • 5kg finished product • 3 kg dry flour • Bowl 7Lt • Bowl, hook, shaft and safety guard all stainless steel • Single phase / single speed • Bowl speed 10rpm • Spiral speed 100rpm • Manufacturer Code: PK5M	240V	0.37kW	540 x 260 x 527 Bowl Size 237 x 160	33kg	$1350.00

TILTING HEAD REMOVABLE BOWL 2 YEAR PARTS & LABOUR WARRANTY

	Model	Product Description	Voltage	Power	Unit Size (mm)	Kg	List Price excl GST
	SMM0018	• 15kg finished product • 10kg dry flour • Bowl 20Lt / Timer • Bowl, hook, shaft all stainless steel • Single phase / single speed • Supplied with castors • Bowl speed 10rpm • Spiral speed 100rpm • Manufacturer Code: PK18AM	240V	0.9kW	700 x 390 x 702 Bowl Size 360 x 210	65kg	$2750.00
	SMM0025	• 20kg finished product • 12.5kg dry flour • Bowl 33Lt / Timer • Bowl, hook, shaft all stainless steel • Single phase / single speed • Supplied with castors • Bowl speed 10rpm • Spiral speed 100rpm • Manufacturer Code: PK25AM	240V	1.1kW	770 x 430 x 790 Bowl Size 400 x 260	95kg	$3295.00
	SMM0044	• 38kg finished product • 25kg dry flour • Bowl 50Lt / Timer • Bowl, hook, shaft all stainless steel • Single phase / single speed • Supplied with castors • Bowl speed 10rpm • Spiral speed 100rpm • Manufacturer Code: PK44AM	240V	1.5kW	860 x 530 x 790 Bowl Size 500 x 270	110kg	$3995.00
ITALY	SMM1044	• 38kg finished product • 25kg dry flour • Bowl 50Lt / Timer • Bowl, hook, shaft all stainless steel • 3 phase 2 speed • Supplied with castors • Bowl speed: 1: 10rpm 2: 20rpm • Spiral speed: 1: 100rpm 2: 200rpm • Manufacturer Code: PK44AD	400V	1.5/2.2kW	860 x 550 x 790 Bowl Size 500 x 270	140kg	$4150.00

FIXED HEAD – FIXED BOWL ECONOMY MODEL 2 YEAR PARTS & LABOUR WARRANTY

	Model	Product Description	Voltage	Power	Unit Size (mm)	Kg	List Price excl GST
 ITALY	SMM9925	Economy Pizza Model • Fixed head/bowl • 20kg finished product • 12.5kg dry flour • Bowl 33Lt / Timer • Bowl, hook, shaft all stainless steel • Supplied with castors • Bowl speed 10rpm • Spiral speed 100rpm • Manufacturer Code: IM25	240V	1.1kW	762 x 430 x 770 Bowl Size 400 x 260	95kg	$2750.00

FORKED KNEADING

Forked Kneading is particularly suited to making soft dough (for Naples style pizza). The shape of the tool and bowl allow the dough to be thoroughly mixed and well oxygenated (aerated), without heating the dough.

FORKED MIXERS

Model	Product Description	Voltage	Power	Unit Size (mm)	Kg	List Price excl GST
SMF0025 Bowl 10rpm Fork 30rpm	Forked Mixer • All rotating parts on ball bearings • Stainless steel frame • Single phase single speed • 30Lt bowl • 25kg finished dough • 15kg bag of flour • Manufacturer Code FC25M	240V	1.1kW	870 x 560 x 890	140kg	$6250.00
SMF0035 Bowl Low 6rpm High 10rpm Fork Low 20rpm High 30rpm	Forked Mixer • All rotating parts on ball bearings • Stainless steel frame • 3 phase 2 speed • 40Lt bowl • 35kg finished product • 20kg bag of flour • Manufacturer Code FC35D	400V 3 Phase	0.75kW/ 1.1kW	885 x 590 x 890	145kg	$7500.00
SMF0080 Bowl Low 6rpm High 10rpm Fork Low 20rpm High 30rpm	Forked Mixer • All rotating parts on ball bearings • Stainless steel frame • 3 phase 2 speed • 93Lt bowl • 80kg finished product • 50kg dry flour (2 bags) • Manufacturer Code FC80D	400V 3 Phase	1.1kW/ 1.5kW	1025 x 1110 x 744	290kg	$15995.00



ITALY

PASTRY SHEETER – BENCH TOP

Model	Product Description	Voltage	Power	Unit Size (mm)	Kg	List Price excl GST
PSM0570	Pastry Sheeter • Ideal for rolling all types of pastries, puff pastry, croissants, pasta dough, etc. • Roller length 500mm • Tables 700mm (each side) • Variable speed • Folding arms for storage • 0-36mm dough thickness • Manufacturer Code SB500PM-70	240V	0.55kW	1520 x 920 x 700	160kg	$ 6250.00



ITALY

SB500-50/70

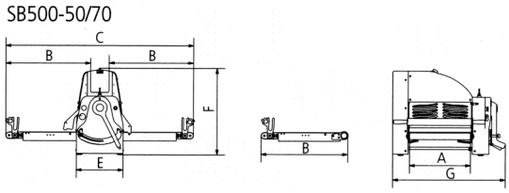

Model	Cylinders Length	Table Length	Belt Speed	Volts	Power	Weight
SB500P-70	500mm	700mm	Variable	230/50/1	0.55kW	160kg

Model	Dimensions mm						
	A	B	C	D	E	F	G
SB500-70	500	700	1520	-	380	700	920

ALL ROLLERS NOW SUPPLIED WITH FOOT PEDAL

DOUGH ROLLERS

	Model	Product Description	Voltage	Power	Unit Size (mm)	Kg	List Price excl GST
 ITALY	DRM0031	Single Pass Dough Roller • Dough portions of 80g - 210g • Includes foot pedal • Safety guard • Stainless steel body • Manufacturer Code DL30M	240V	0.375kW 0.5hp	420 x 450 x 350	27kg	$1195.00
 ITALY	DRM0030	Dough Roller 30cm • Dough portions of 80g - 210g • Includes foot pedal • Safety guards • Stainless steel body • Manufacturer Code DL30	240V	0.375kW 0.5hp	420 x 450 x 650	35kg	$1595.00
 ITALY	DRM0040	Dough Roller 40cm • Dough portions of 80g - 400g • Includes foot pedal • Safety guards • Stainless steel body • Manufacturer Code DL40	240V	0.375kW 0.5hp	520 x 450 x 712	45kg	$1995.00
 ITALY	DRM1040	Dough Roller 40cm parallel • Dough portions of 100g - 700g • Includes foot pedal • Safety guards • Stainless steel body • Manufacturer Code DL40P	240V	0.375kW 0.5hp	520 x 450 x 750	45kg	$1995.00

FOOT PEDAL

	DRA0001	Foot Pedal • Suits all above rollers					$ 150.00

MINCER

	Model	Product Description	Voltage	Power	Unit Size (mm)	Kg	List Price excl GST
 ITALY	MNS0008 MPE0804 MPE0808 MNF8010 MNF8020	Meat Mincer - No. 8 • Capacity approx. 20kg per hour • Supplied with 6mm plate • 4.5mm plate 8mm plate • 10mm sausage funnel 20mm sausage funnel • Manufacturer Code: 11850Y/I	240V	0.3kW	320 x 200 x 430	10kg	$ 440.00 $ 15.00 $ 15.00 $ 8.00 $ 8.00

TOMATO SQUEEZER ATTACHMENT

 ITALY	TSE1004	Tomato Squeezer Attachment • To suit above mincer • Manufacturer Code: 17430/I	N/A	N/A	280 x 365 x 340	5kg	$ 220.00

MINCER – HEAVY DUTY

ANVIL ALTO

 TAIWAN	MGT0012	Heavy Duty Mincer • Aluminium safety guard • 200kg per hour capacity • Supplied with sausage filler funnel • Supplied with 3.1mm, 4.8mm, 6.2mm and 9.5mm plates • Supplied with 4 knives: 2 x 3 blade, 1 x 2 blade and 1 x 4 blade • Forward and reverse functions • Allow to cool after 1 hour of continuous use • Manufacturer Code: TS-8241-EXA	240V	0.56kW 0.75hp	600 x 260 x 310	23kg	$ 825.00

MEAT MINCER

NEW!  CHINA	MIK0022	Mincer • Powerful energy efficient motor • Precision gear drive • 220kg/hr capacity • Supplied with stainless steel knife, 6 & 8mm plates and plastic food pusher • Body and all components that come in contact with food are stainless steel • Manufacturer Code: MRG04-SS22	240V	1.12 kW 1.5Hp	453 x 503 x 644	46kg	$1,195.00

'ANVIL' FOOD PROCESSOR

	Model	Product Description	Voltage	Power	Unit Size (mm)	Kg	List Price excl GST
 BRAZIL	FPA0001	Food Processor • Extra heavy duty construction • Fitted with safety micro switches in the handle and lid • 385 rpm motor • Ideal for high volume applications such as pizza shops, etc • Specially designed to process 300 - 400kg of product (including cheese) per hour • Price includes choice of any 2 blades • Manufacturer Code: PAIE	240V	0.375kW	590 x 250 x 440	25kg	$ 1850.00

FOOD PROCESSOR BLADES

BRAZIL 	FPE0001 FPE0003 FPE0005 FPE0010	Veg/Cut Plate - Slicing 1mm (E1) Veg/Cut Plate - Slicing 3mm (E3) Veg/Cut Plate - Slicing 5mm (E5) Veg/Cut Plate - Slicing 10mm (E10)		$ 140.00
BRAZIL 	FPZ0003 FPZ0005 FPZ0008	Veg/Cut Plate - Shredding 3mm (Z3) Veg/Cut Plate - Shredding 5mm (Z5) Veg/Cut Plate - Shredding 8mm (Z8)		$ 140.00
BRAZIL 	FPW0002 FPW0004	Veg/Cut Plate - Crinkle Cut 2mm (W2) Veg/Cut Plate - Crinkle Cut 4mm (W4)		$ 140.00
BRAZIL 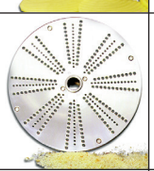	FPV0001	Veg/Cut Plate - Parmesan (V)		$ 140.00
BRAZIL 	FPH0003 FPH0007	Veg/Cut Plate - Julienne 3mm (H3) Veg/Cut Plate - Julienne 7mm (H7)		$ 140.00
BRAZIL 	FPM0001	Veg/Cut Plate - Chipping Grid 10mm (M10)	This grid has to be used together with an 'E' slicing blade	$ 165.00
BRAZIL 	FPD0008 FPD0012 FPD0016	Veg/Cut Plate - Cubing Grid 8mm (G8) Veg/Cut Plate - Cubing Grid 12mm (G12) Veg/Cut Plate - Cubing Grid 16mm (G16)	These grids have to be used together with an 'E' slicing blade	$ 165.00

10 QUART

Model	Product Description	Voltage	Power	Unit Size (mm)	Kg	List Price excl GST
PMA1010	10 Quart Mixer with Timer • 5 fixed speeds • 0.8Hp air cooled motor • Direct drive gear driven trans. • Long life gear box • Grease packed ball bearing • Guard fitted w. safety micro-switch • Gears and shafts made of heat treated alloy steel • 3 attachments supplied: whisk, hook and paddle • VOLUME GUIDE: Mashed Potatoes: 1.5kg Waffle/Pancake Mix: 2lt Pound Cake Mix: 2.5kg Bread/Roll Dough: 1.3kg (800g flour) (500mL water) • Speeds: 158/242/289/358/405 rpm • Manufacturer Code: GM-10AR	240V	650W	350 x 450 x 530	22kg	$ 1095.00



TAIWAN

20 QUART

Model	Product Description	Voltage	Power	Unit Size (mm)	Kg	List Price excl GST
PMA1020	20 Quart Mixer with Timer • 3 fixed speeds w. easy speed shifting • Direct drive gear driven trans. • Long life gear box • Grease packed ball-bearing • Safety guard stainless steel • Gears and shafts made of heat treated alloy steel • 0.5HP motor • 3 attachments supplied: whisk, hook and paddle • VOLUME GUIDE: Mashed Potatoes: 6kg Waffle/Pancake Mix: 8lt Pound Cake Mix: 10kg Bread/Roll Dough: 3kg (2kg flour) (1lt water) • Speeds: 130/259/473 rpm • Manufacturer Code: GM-20SAT-3	240V	375W	417 x 486 x 802	100kg	$ 2550.00



TAIWAN

40 QUART

Model	Product Description	Voltage	Power	Unit Size (mm)	Kg	List Price excl GST
PMA1040	40 Quart Mixer with Timer • 3 fixed speeds with easy speed shifting • Powerful 1.5HP air cooled motor • Direct drive 100% gear driven transmission • Safety guard stainless steel • 1.5HP motor • 3 attachments supplied: whisk, hook and paddle • VOLUME GUIDE Mashed Potatoes: 13kg Waffle/Pancake Mix: 16lt Pound Cake Mix: 20kg Bread/Roll Dough: 10kg • Speeds: 127/261/478 rpm • Manufacturer Code: GM-40SAT-3	240V	1.125kW	610 x 660 x 1270	238kg	$ 5500.00



TAIWAN

TOMATO SLICER

	Model	Product Description	Voltage	Power	Unit Size (mm)	Kg	List Price excl GST
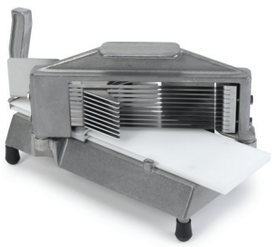 USA	NTS0045	Easy Tomato Slicer 4.5mm • Save time, labour & workspace • 60% less space than others • Razor sharp blades cut with trouble free precision • Unique self-lubricating track material that resists misalignment problems that cause nicks and broken blades • Manufacturer Code: 55600-1	N/A	N/A	360 x 160 x 170	4kg	$ 399.00
	NTS0060	Easy Tomato Slicer 6mm • Manufacturer Code: 55600-2					$ 399.00
	XNTS4661	Spare Blade for 4.5mm 13 Wires • Manufacturer Code: 466-1					$ 82.50
	XNTS4662	Spare Blade for 6mm 10 Wires • Manufacturer Code: 466-2					$ 82.50

SCOOPER

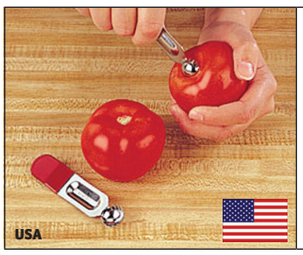 USA	NTS55875	Easy Tomato Scooper • Removes tomato stems in one movement • Increases life of blade by reducing damage caused by hard stems • Manufacturer Code: 55875	N/A	N/A			$ 3.60

SLICER

 USA	NES0001	Easy Slicer • The one slicer you need to make fast, easy work of fruits and veg • Unique adjustable blade provides full range of slicing options from 1.6mm to 12.7mm in thickness • Manufacturer Code: 55200AN	N/A	N/A	280 x 200 x 400	4kg	$ 685.00
	NES1001	Portable Base Table • Suits Easy Slicer NES0001 • Manufacturer Code: 55816	N/A	N/A	500 x 340 x 60	3kg	$ 220.00

CHOPPER

 USA	NEC0002	Easy Chopper II • 3/8" x 3/8" (9mm x 9mm) square cut • Manufacturer Code: 56500-2	N/A	N/A	250 x 250 x 512	4kg	$ 450.00
	NEC0003	• 1/2" x 1/2" (12mm x 12mm) square cut • Manufacturer Code: 56500-3	N/A	N/A		4kg	$ 450.00
	NEC0004	• 1/4" x 1/4" (6mm x 6mm) square cut • Manufacturer Code: 56500-1	N/A	N/A		4kg	$ 450.00

GRIDDLE SCRAPER

	Model	Product Description	Voltage	Power	Unit Size (mm)	Kg	List Price excl GST
 USA	NEG0001	Easy Griddle Scraper • Ergonomically designed to put more pressure on the blade with less effort. • Heavy duty cast aluminium body, stainless steel blades • Manufacturer's Code 55825	N/A	N/A	400 x 150 x 100	2kg	$ 85.00
	XNEG55607-6	Spare Blades – 6 Pack					$ 39.00

LETTUCE CUTTER

 USA	NEL0001	Easy Lettuce Cutter • 3/8" (9mm) slices • Clean cut prevents lettuce browning on the edges • No crushing or bruising of product • Manufacturer's Code 55650-C5	N/A	N/A	325 x 450 x 500	8kg	$ 850.00
	NEL0002	Easy Lettuce Cutter • 1/2" (12mm) x 1/2" (12mm) square cut • Manufacturer's Code 55650-3	N/A	N/A	325 x 450 x 500	8kg	$ 850.00

ONION SLICER

 USA	NEO0001	Easy Onion Slicer • 3/16" (4.6mm) slice • Can handle product up to 100mm diameter • Great for onions, oranges and most other firm produce • Manufacturer's Code 56750-1	N/A	N/A	250 x 475 x 750	10kg	$ 750.00

WEDGER

 USA	NEW0006	6 Section Wedger • Perfect for food and beverage operations • Cuts perfect wedges every time • Saves labour • Will not bruise product • Works with lemons, lime, oranges, potatoes, zucchini, tomatoes, etc. • Manufacturer Code: 5555-6	N/A	N/A	200 x 200 x 480	2kg	$ 285.00
	NEW0008	8 Section Wedger • Manufacturer Code: 5555-8	N/A	N/A	200 x 200 x 480	2kg	$ 285.00
	NEW0010	10 Section Wedger • Manufacturer Code: 5555-10	N/A	N/A	200 x 200 x 480	2kg	$ 285.00

'SKYMSEN' CITRUS JUICER

	Model	Product Description	Voltage	Power	Unit Size (mm)	Kg	List Price excl GST
 BRAZIL	CES0001	Citrus Juicer • 1750 rpm motor • 2 size reamers supplied: – Small - to suit lemons, limes – Large - to suit oranges, grapefruit • Manufacturer Code: EXI	240V	0.18kW	195 x 340 x 380	5kg	$ 350.00

TILTING BLENDER

 BRAZIL	LQS0025	Blender 25Lt • Suitable for all types of foods: soups, sauces, ice cream, juices, etc. • 3500 rpm • 304 stainless steel container • Blender tilts past 90° to easily pour out contents • Manufacturer Code: LAR-25	240V	0.73kW 1hp	350 x 600 x 1200	22kg	$ 1500.00

SAUSAGE FILLERS

 ITALY	SFT0005	5lt Sausage Filler • Stainless steel cylinder • Gear rack in carbon steel • Aluminium gear block with self lubricating bushes • Silicon gasket • Supplied with 10, 20 and 30mm funnels • Manufacturer Code: 20000	N/A	N/A	520 x 210 x 160	7kg	$ 365.00
 ITALY	SFT0008	7lt Sausage Filler • Stainless steel cylinder • Gear rack in carbon steel • Aluminium gear block with self lubricating bushes • Silicon gasket • Supplied with 10, 20 and 30mm funnels • Manufacturer Code: 20100	N/A	N/A	635 x 210 x 160	9kg	$ 395.00

DEHYDRATING / BILTONG CABINETS

	Model	Product Description	Voltage	Power	Unit Size (mm)	Kg	List Price excl GST
 SOUTH AFRICA	BCA0001	Biltong Cabinet – Small • NEW full stainless steel body • Preset temperature control to avoid tampering • Heater cannot be switched on without fan being in operation • Efficient extraction fan for maximum air flow and uniform drying throughout cabinet • Unit can cure 25kg of wet product at a time • Chamber size: 500 x 450 x 960 Accessories supplied: • 10 x galvanised hanging rods • 1 x stainless steel drip tray • Manufacturer Code: BCB0245	240V	0.75kW	580 x 460 x 1080	43kg	$ 1150.00
 SOUTH AFRICA	BCA1001	Biltong Cabinet – Large • Glass window for product display • Unit fitted with anti-bacterial ultraviolet lamp for product protection • Locking door handle for security • Adjustable thermostat • Powerful extraction fan to ensure maximum air flow for uniform drying throughout • Heater cannot be switched on without fan being in operation • Unit can cure 100kg of wet product at a time • Chamber size: 950 x 730 x 1750 Accessories supplied: • 24 x galvanised hanging rods • 1 x stainless steel drip tray • Manufacturer Code: BCB1250 **+ FREIGHT: DUE TO THE SIZE OF THIS ITEM, PRICE QUOTED IS EX WAREHOUSE SYDNEY**	240V	2 x 0.75kW 15A	1000 x 740 x 2015	120kg	$ 3950.00

BENCHTOP DEHYDRATORS

TRE SPADE

	Model	Product Description	Voltage	Power	Unit Size (mm)	Kg	List Price excl GST
 ITALY	DCT0005	Drying Cabinet – 5 Tray • Structure in ABS and PVC • 5 drying drawers in ABS • Total surface available to place drying food: 0.43m^2 • 5 manual and 7 preset programmes • Continuous working time: no limits • Standard voltage and frequency: 220-240V/50Hz • Manufacturer's Code: 73500/AUS	240V	1.11kW 1.5hp	470 x 270 x 270	4kg	$ 425.00
 ITALY	DCT0006	Deluxe 6 Drawer Drying Cabinet • Structure in stainless steel and ABS • 6 drying drawers in stainless steel • Total surface available to place drying food: 0.52m^2 • 5 manual and 7 preset programmes • Continuous working time: no limits • Standard voltage and frequency: 220-240V/50Hz • Manufacturer's Code: 73500/LAUS	240V	1.11kW 1.5hp	470 x 270 x 270	6kg	$ 685.00

RIO ~ POLYCARBONATE JUG BAR BLENDER

	Model	Product Description	Voltage	Power	Unit Size (mm)	Kg	List Price excl GST
 CHINA	BBN0250	Rio Blender – Polycarbonate • New wave action jug design • 2-speed with pulse • Jar pad sensor prevents blender running when jug not in place • Sure grip rubber feet • 1.25Lt container • Can blend ice in cocktails but **not suitable for frappés and other ice-based drinks** • Manufacturer's Code: HBB250-AU	240V	0.45kW	165 x 203 x 406	4kg	$ 355.00
	XBBN0001	Jug for BBN0250 • Manufacturer's Code: 6126-250-CE					$ 165.50

RIO ~ STAINLESS STEEL JUG BAR BLENDER

	Model	Product Description	Voltage	Power	Unit Size (mm)	Kg	List Price excl GST
 CHINA	BBN1250S	Rio Blender – Stainless Steel • New wave action jug design • 2-speed with pulse • Jar pad sensor prevents blender running when jug not in place • Sure grip rubber feet • 0.95Lt stainless steel jug • Can blend ice in cocktails but **not suitable for frappés and other ice-based drinks** • Manufacturer's Code: HBB250S-AU	240V	0.45kW	165 x 203 x 393	4kg	$ 385.00
	XBBN0002	Jug for BBN1250S • Manufacturer's Code: 6126-2505-CE					$ 225.00

TEMPEST ICE BLENDER

	Model	Product Description	Voltage	Power	Unit Size (mm)	Kg	List Price excl GST
2 YEAR WARRANTY ON PARTS & LABOUR*  CHINA	BBT0650	Tempest Blender – Ice • New wave action jug design • Makes daiquiris in 12 seconds • 2-speed, jump cycle and pulse • Timer with auto shut-off • 3hp motor with all metal drive coupling • 2Lt stackable jug • Sure grip rubber feet • Temperature gauge and special cool-down cycle prevents motor from burning out • Manufacturer's Code: HBH650-AU	240V	2.2kW	178 x 203 x 457	5kg	$ 995.00
	XBBN1001	Jug for BBT0650 • Manufacturer's Code: 6126-650					$ 240.00

*2 Years or 20,000 cycles

TEMPEST FOOD BLENDER

	Model	Product Description	Voltage	Power	Unit Size (mm)	Kg	List Price excl GST
2 YEAR WARRANTY ON PARTS & LABOUR*  CHINA	BBF0600	Tempest Blender – Food • Wave action jug design • 3hp motor enables chefs to puree, emulsify, grind, chop, etc. • Variable speed control for products that need slower or faster blending eg. mayonnaise • Unique one touch chopping function for chopping solid ingredients • Slow pour filler cap to easily add liquid to sauces etc while blending • Same jug as Tempest 650 • Manufacturer's Code: HBF600-AU	240V	2.2kW 3hp	178 x 203 x 457	5kg	$ 995.00
	XBBN1001	Jug complete for food blender • Manufacturer's Code: 6126-650					$ 240.00

*2 Years or 20,000 cycles

ECLIPSE BLENDER

	Model	Product Description	Voltage	Power	Unit Size (mm)	Kg	List Price excl GST
 2 YEAR WARRANTY ON PARTS & LABOUR* CHINA	BBE0750	Eclipse Blender • High performance blender • New QuietBlend Technology • Pwerful 3Hp motor • Life Time Warrenty on drive coupling and stainless steel blade • Select from 100 pre-programmed cycles • IN/ON counter model • Manufacturer's Code: HBH750-AU	240V	3Hp	210 x 290 x 470	6kg	$ 1695.00
	XBBE1001	Spare Jug for Eclipse					$ 220.00

SUMMIT IN/ON COUNTER

 2 YEAR WARRANTY ON PARTS & LABOUR* In or on counter model CHINA	BBS0850	Summit Blender • Auto blend, one touch sensor blending • Wave action jug • Hundreds of pre-programmed cycles • Unique baffle keeps motor cool by circulating air around motor and prevents water ingress • Dual fans keep motor cool between blends • USB port for sharing programmes; ideal for consistency in franchise stores • Jar pad sensor turns motor off when jug not in place • Tough and durable quiet shield allowing one-handed operation • 64oz / 2lt jug • Manufacturer's Code: HBH850-AU	240V	2.2kW	229 x 305 x 483	8kg	$ 1995.00

*2 Years or 20,000 cycles

JUG FOR NEW 'TEMPEST' & 'SUMMIT' BLENDERS

	XBBN1001	Suits new BBT0650 'Tempest' and BBS0850 'Summit' • Warranty on jugs is 3 months • Manufacturer's Code: 6126-650					$ 240.00

Blender jugs are a consumable item and are not covered by the warranty on the motor. The manufacturer recommends replacing the jugs every 12 months. However this is a guide only and depends on usage, number of jugs in the system and washing methods. Continuing to use jugs once the bearings are worn can result in damage to the motor which will void the warranty.

QUIET SHIELD FOR 'TEMPEST' BLENDERS

 USA	XBBN0651	Suitable for new and old model 'Tempest' blenders • Manufacturer's Code: SE2-HBH-650 NOTE: Blender ***not*** included					$ 450.00

MILKSHAKE MIXERS TRIPLE & SINGLE

	Model	Product Description	Voltage	Power	Unit Size (mm)	Kg	List Price excl GST
 CHINA	HMD0200	Single Milkshake Mixer • Supplied with stainless steel cup • Sealed and permanently lubricated bearings • 3-speed settings • Activates by placing cup in position • Manufacturer's Code: HMD200-AU Optional Impellors	240V	0.3kW	165 x 171 x 521	6.3kg	$ 450.00
	XHMD0929	• Frozen Dessert Impellor					$ 45.00
	XHMD0930	• Agitator for mixing in of pre-ground candies, biscuits, etc					$ 45.00
 CHINA	HMD0400	Triple Milkshake Mixer • Supplied with 3 stainless steel cups • Sealed and permanently lubricated bearings • 3-speed settings • Activates by placing cup in position • Manufacturer's Code: HMD400-AU	240V	0.3kW per motor	318 x 229 x 521	16.7kg	$ 1350.00

WALL MOUNTED MILKSHAKE MIXER

 CHINA	HMD0300	Wall Mounted Milkshake Mixer • Powerful 2 speed motor for fast and efficient mixing • Heavy duty die cast, stainless steel construction • Removable cup guide and rest • Wall mounting kit included • Manufacturer's Code: HMD300	240V	0.3kW	101 x 146 x 419	4kg	$ 750.00

CREAM GUNS

	Model	Product Description	Voltage	Power	Unit Size (mm)	Kg	List Price excl GST
 TAIWAN	CGB0001	Cream Gun – 0.5Lt • Full steel head • Supplied with floret and decorating nozzles	N/A	N/A			$ 89.00
	CGB0002	Cream Gun – 1Lt • Full steel head • Supplied with floret and decorating nozzles	N/A	N/A			$ 99.00

CREAM CHARGERS

	CGB1001	• 8g (grams) nitrous oxide bulbs • 10 bulbs per pack • 40 packs per carton For bulk pricing (10 cartons +) please contact your area sales manager or our head office.	N/A	N/A			$ 6.00

SODA CHARGERS

	CGB9999	• Carbon dioxide bulbs • 10 bulbs per pack • 36 packs per carton	N/A	N/A			$ 6.75

SPARE PARTS

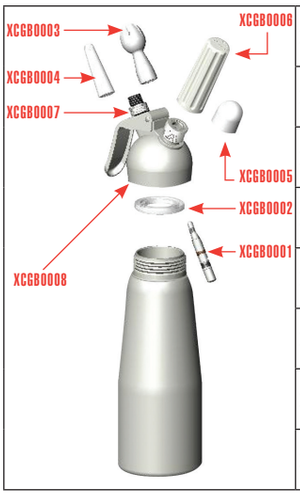	XCGB0001	Piston					$ 8.50
	XCGB0002	Cap Gasket					$ 3.85
	XCGB0003	Floret Nozzle					$ 3.85
	XCGB0004	Decorative Nozzle					$ 3.85
	XCGB0005	Cap for Threaded Section					$ 2.75
	XCGB0006	Charger Holder					$ 9.90
	XCGB0007	Nozzle Holder					$ 2.75
	XCGB0008	Metal Head Complete					$ 55.00

DRAWERS

	Model	Product Description	Voltage	Power	Unit Size (mm)	Kg	List Price excl GST
NEW!  GREECE	DCI0004	4 Drawer Cabinet • AISI 304 18/8-10 Stainless Steel • Optional castors • Perfect as a vacuum sealer stand • Manufacturer Code: ESS752D	N/A	N/A	520 x 700 x 870	17kg	$ 850.00

TROLLEYS

 CHINA	TRS0003	Stainless Steel 3 Tier Trolley • Square tube frame 25mm x 25mm • Maximum carrying capacity: 120kg • Distance between shelves: 270mm • On castors 2 with brakes • Supplied in flat pack • Muffler plate under each shelf to absorb sound • Rolled ends to prevent any sharp edges or burrs • Manufacturer Code: YC103B	N/A	N/A	855 x 535 x 930	13kg	$ 220.00
 CHINA	TRS0015	Stainless Steel 15 Tier GN Trolley • Square stainless steel tube frame 25mm x 25mm • 125mm high castors • On castors 2 with brakes • Supplied in flat pack • Manufacturer Code: YC215M1	N/A	N/A	385 x 550 x 1735	18kg	$ 325.00
 CHINA	TRS2015	Stainless Steel GN Trolley 2 x 15 Tier • Square stainless steel tube frame 25mm x 25mm • 125mm high castors • On castors 2 with brakes • Supplied in flat pack • Manufacturer Code: YC215M	N/A	N/A	740 x 555 x 1735	30kg	$ 495.00

PLATFORM TROLLEY

 CHINA	TRS0609	Platform Trolley • Fold down handle • Stainless Steel construction • Bearing weight 300kg • Manufacturer Code: YC609	N/A	N/A	1000 x 600 x 900	10kg	$ 275.00

GRILL SCRAPERS

	Model	Product Description	Voltage	Power	Unit Size (mm)	Kg	List Price excl GST
 INDIA	GBP0001	Stainless Steel Handle Wire Brush Griddle Scraper • Easily replaceable brush head • Tough, durable and effective • Hook for convenient storage • Profiled, laser cut edge, suits most griddle profiles • Manufacturer Code:	N/A	N/A			$ 95.00
 SOUTH AFRICA	XGBP0001	Replacement brushes • Manufacturer Code:	N/A	N/A			$ 10.00

TAPWARE

MONOLITH

NEW!  ITALY	WAM0001	• Spray Arm no spout • Operating Temps: 5°c to 85°c • Max operating pressure: 7Bar • Single hole deck mount • Hot and Cold taps • Watermark approved • 6 Star WELS rating Man Code: A0101020126	N/A	N/A			$ 595
NEW!  ITALY	WAM1002	• Spray Arm with pot spout • Operating Temps: 5°c to 85°c • Max operating pressure: 7Bar • Single hole deck mount • Hot and Cold taps • Watermark approved • 6 Star WELS rating Man Code: A0101020111	N/A	N/A			$ 695

ECOLINE UNDERCOUNTER GLASSWASHER

Model	Product Description	Voltage	Power	Unit Size (mm)	Kg	List Price excl GST
DWA0040	Undercounter Glasswasher • Internal clearance 270mm • 2 minute cycle • Double insulated door • Rinse aid and detergent pump • 2 analogue temperature displays • Stainless steel wash arms • Drain pump • Stainless steel inlet hose • Caleffi pressure control valve • Basket size: 355mm x 430mm supplied • Tank capacity 11ltr - element 2Kw • Boiler capacity 3ltr - element 2.4Kw • ½ Hp wash pump • Inlet pressure 2-4 bar • Water consumption 2ltr/cycle at 2 Bar • Manufacturer's Code: EC040ks	240V	2.8Kw 15A	495 x 515 x 830	38kg	$ 2775.00



ITALY

ECOLINE UNDERCOUNTER DISHWASHER

DWA0050	Undercounter Dishwasher • Internal clearance 340mm • 2 cycles 1 minute, 3 minutes • Double insulated door • Rinse aid and detergent pump • 2 analogue temperature displays • Stainless steel wash arms • Drain pump • Stainless steel inlet hose • Caleffi pressure control valve • Basket size: 500mm x 500mm, 2 supplied • Tank capacity 24ltr - element 2.8Kw • Boiler capacity 7ltr - element 2.8Kw • ¾ Hp wash pump • Inlet pressure 2-4 bar • Water consumption 2.8ltr/cycle at 2 Bar • Manufacturer's Code: EC050ks	240V	3.4Kw 15A	580 x 600 x 825	60kg	$ 3725.00



ITALY

ECOLINE PASS THROUGH (Hood Type) DISHWASHER

	Model	Product Description	Voltage	Power	Unit Size (mm)	Kg	List Price excl GST
  ITALY	DWA1000	Pass Through Dishwasher • Internal clearance 420mm • 2 cycles 1 minute, 3 minutes • Wash pump, rinse aid and detergent pump • 2 analogue temperature displays • Stainless steel wash arms • Double stainless steel mesh filter • Pressure rinse pump • Caleffi pressure control valve • Basket size: 500mm x 500mm, 2 supplied • Tank capacity 20ltr - element 4Kw • Three Phase • Boiler capacity 10ltr - element 9Kw • 1 Hp wash pump • Inlet pressure 2-4 bar • Water consumption 2.8ltr/cycle at 2 Bar • Drain Pump • Manufacturer's Code: ECO1000ks	400V	9.8Kw 3 Phase 14.2A	650 x 710 x 1490 closed 650 x 710 x 1940 open	130kg	$ 5995.00
	DWA1001	Pass Through Dishwasher • Single Phase • 4Kw element • Manufacturer's Code: ECO1001ks	240V	4.8Kw 21A	650 x 710 x 1490 closed 650 x 710 x 1940 open	130kg	$ 5995.00

BOTH ABOVE MODELS NOW SUPPLIED WITH DRAIN PUMP AS STANDARD

TOPLINE UNDERCOUNTER DISHWASHER

	Model	Product Description	Voltage	Power	Unit Size (mm)	Kg	List Price excl GST
 ITALY	DWA5550	Undercounter Dishwasher • Internal clearance 340mm • Digital display • Waterproof soft touch LED control • 50% water and energy saving • 3 cycles 2, 3 and 4 minutes • Rinse aid and detergent pump • Auto self cleaning drain pump • Double stainless steel mesh filters • Soft start to all cycles • Auto diagnostic system • Caleffi pressure valve • Tank capacity 13ltr - element 2.8Kw • Boiler capacity 7ltr - element 2.8Kw • Manufacturer's Code: AT50 Green	240V	3.4Kw 15A	595 x 600 x 845	65kg	$ 4800.00

UPRIGHT REFRIGERATORS

	Model	Product Description	Voltage	Power	Unit Size (mm)	Kg	List Price excl GST
 CHINA	EUS1738	Single Split Door Upright Refrigerator 580lt • 43˚C ambient • On castors – 2 lockable, 2 free running • Dixell controllers • R134a gas • Fan forced cooling • Auto defrost • 4 shelves • 0-10˚C • Rounded internal corners for easy cleaning • Door gasket easy to remove and clean • Manufacturer's Code: SUF6B2	240V	0.4Kw	738 x 818 x 1980	118kg	$ 2650.00
 CHINA	EUS1142	Double Split Door Upright Refrigerator 1200lt • 43˚C ambient • On castors – 2 lockable, 2 free running • Dixell controllers • R134a gas • Fan forced cooling • Auto defrost • 8 shelves • 0-10˚C • Rounded internal corners for easy cleaning • Door gasket easy to remove and clean • Manufacturer's Code: SUF12B4	240V	0.52Kw	1425 x 818 x 1980	195kg	$ 3650.00

SHELVES AND GUIDES FOR EUS RANGE

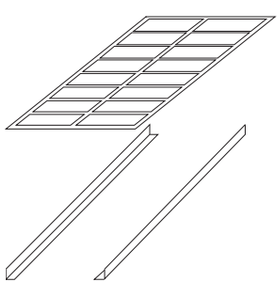	XEUS0001	Pair of shelf guides	N/A	N/A	N/A		$ 25.00
	XEUS0002	Shelf	N/A	N/A	650 x 529		$ 45.00

Please note that prices for refrigeration are ex-warehouse Sydney and do not include freight.

UPRIGHT FREEZERS

	Model	Product Description	Voltage	Power	Unit Size (mm)	Kg	List Price excl GST
 CHINA	EUS2738	Single Split Door Upright Freezer 580lt • 43˚C ambient • -10˚C to -22˚C • On castors – 2 lockable, 2 free running • Dixell controllers • R404a gas • Fan forced • Auto defrost • 4 shelves • Rounded internal corners for easy cleaning • Door gasket easy to remove and clean • Manufacturer's Code: SUF6A2	240V	0.68Kw	738 x 818 x 1980	119kg	$ 2950.00
 CHINA	EUS2142	Double Split Door Upright Freezer 1200lt • 43˚C ambient • -10˚C to -22˚C • On castors – 2 lockable, 2 free running • Dixell controllers • R404a gas • Fan forced • Auto defrost • 8 shelves • Rounded internal corners for easy cleaning • Door gasket easy to remove and clean • Manufacturer's Code: SUF12A4	240V	0.94Kw	1425 x 818 x 1980	195kg	$ 4150.00

Please note that prices for refrigeration are ex-warehouse Sydney and do not include freight.

UNDERCOUNTER FRIDGES

	Model	Product Description	Voltage	Power	Unit Size (mm)	Kg	List Price excl GST
 CHINA	CUS1500	Undercounter Refrigerator 1500mm Stainless Steel Doors 382lt • 43˚C ambient • Running temperature 0˚-10˚C • On castors – 2 lockable, 2 free running • Fan cooling • Digital controller • Auto defrost • 2 shelves • Monobloc Cooling System • Manufacturer's Code: CWF15M2-76	240V	0.41Kw	1500 x 760 x 850	111kg	$ 2550.00
 CHINA	CUG1500	Undercounter Refrigerator 1500mm Glass Doors 382lt • 43˚C ambient • Running temperature 0˚-10˚C • On castors – 2 lockable, 2 free running • Fan cooling • Digital controller • Auto defrost • 2 shelves • Monobloc Cooling System • Manufacturer's Code: CWF15M2G-76	240V	0.42Kw	1500 x 760 x 850	114kg	$ 2700.00
 CHINA	CUS1800	Undercounter Refrigerator 1800mm Stainless Steel Doors 491lt • 43˚C ambient • Running temperature 0˚-10˚C • On castors – 2 lockable, 2 free running • Fan cooling • Digital controller • Auto defrost • 2 shelves • Monobloc Cooling System • Manufacturer's Code: CWF18M2-76	240V	0.42Kw	1800 x 760 x 850	119kg	$ 2800.00

Please note that prices for refrigeration are ex-warehouse Sydney and do not include freight.

UNDERCOUNTER FREEZERS

	Model	Product Description	Voltage	Power	Unit Size (mm)	Kg	List Price excl GST
 CHINA	CUF1200	Undercounter Freezer 1200mm Stainless Steel Door 228lt • 43˚C ambient • Running temperature -10˚C to -18˚C • On castors – 2 lockable, 2 free running • Fan cooling • Digital controller • Auto defrost • 1 shelf • Monobloc Cooling System • Door opening 610mm wide, requires 688mm clearance • Manufacturer's Code: K-CWF12M1-76	240V	0.5Kw	1200 x 760 x 850	98kg	$ 2650.00
 CHINA	CUF1800	Undercounter Freezer 1800mm 491lt • 43˚C ambient • Running temperature -10˚C to -18˚C • On castors – 2 lockable, 2 free running • Fan cooling • Digital controller • Auto defrost • 2 shelves • Monobloc Cooling System • Manufacturer's Code: K-CWF18M2-76	240V	0.525Kw	1800 x 760 x 850	127kg	$ 3150.00

REMOVABLE MONOBLOC COOLING SYSTEM



Please note that prices for refrigeration are ex-warehouse Sydney and do not include freight.

BEVERAGE COOLERS

	Model	Product Description	Voltage	Power	Unit Size (mm)	Kg	List Price excl GST
 CHINA	DFS0380	Single Door Display Refrigerator 380lt • 43˚C ambient • 0-10˚C • Fan cooling • Auto defrost • Self closing door • 4 shelves • Fluorescent light box with separate switches • Lock and key • Manual thermostat • Digital display • Manufacturer's Code: SL-P380WA **Available for free pick up in Sydney, Melbourne & Brisbane.** **Ask about our bulk discount on this item.**	240V	0.38Kw	606 x 620 x 1940	78kg	$ 1195.00
 CHINA	DFS1000	Double Door Display Refrigerator 1000lt • 43˚C ambient • 0-10˚C • Fan cooling • Auto defrost • Self closing door • 5 shelves per door • Fluorescent light box with separate switches • Lock and key • Carel Controller • Digital display • Manufacturer's Code: SL-P1000WB-A **Available for free pick up in Sydney, Melbourne & Brisbane.** **Ask about our bulk discount on this item.**	240V	0.75Kw	1130 x 720 x 2023	139kg	$ 1995.00

Please note that prices for refrigeration are ex-warehouse Sydney and do not include freight.

REFRIGERATED INGREDIENT UNIT

Model	Product Description	Voltage	Power	Unit Size (mm)	Kg	List Price excl GST
VRX1200	Refrigerated Ingredient Well • Takes 4 x ⅓ GN pans or 3 x ⅓ + 1 x ½ size, not supplied • Manufacturer's Code: VRX1200/380	240V	0.19kW	1200 x 395 x 435	43kg	$ 995.00
VRX1500	Refrigerated Ingredient Well • Takes 6 x ⅓ GN pans or 5 x ⅓ + 1 x ½ size, not supplied • Manufacturer's Code: VRX1500/380	240V	0.19kW	1500 x 395 x 435	48kg	$ 1095.00
VRX1800	Refrigerated Ingredient Well • Interior and exterior stainless steel • Supplied with glass in kit form • Ambient temperature 38˚C • Takes 8 x ⅓ GN pans, not supplied • Digital controller dixell • Adjustable feet • Manufacturer's Code: VRX1800/380	240V	0.19kW	1800 x 395 x 435	51kg	$ 1150.00

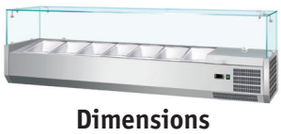

Dimensions

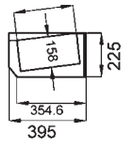

Inserts

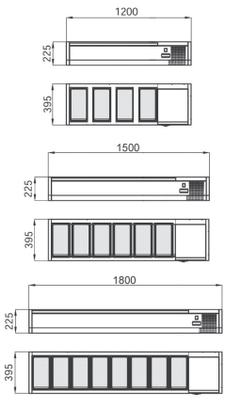

CHINA

GRANITA MACHINES

FEATURES:

- DC Brushless motor controlled by torque NOT temperature; prevents auger from breaking if product freezes solid
- Auto shut off
- Minimum brix now only 8%

GRANITA MACHINES

GMR0001	Single Bowl Granita Machine • 1 x 12lt polycarbonate container	240V	0.49kW	270 x 510 x 810	32kg	$ 1995.00
GMR0002	Double Bowl Granita Machine • 2 x 12lt polycarbonate bowls	240V	1.012kW	470 x 510 x 810	59kg	$ 2995.00
GMR0003	Triple Bowl Granita Machine • 3 x 12lt polycarbonate bowls • 32˚C ambient temperature • 2 hour preparation time for granita • Less than 70db • R404A Gas • Performance temperature -2˚C to -4˚C	240V	1.544kW	670 x 510 x 810	78kg	$ 3995.00



All sizes available in black only

CHINA

Please note that prices for refrigeration are ex-warehouse Sydney and do not include freight.

KING TROLLEY range of 20, 40, 80 and 120 tray blast chillers/freezers available on request. These are brought in to order only and are not stock items. 3, 5, 10, 15 and 20 tray are all stock items and are usually available ex stock.

BLAST CHILLERS / FREEZERS

	Model	Product Description	Voltage	Power	Unit Size (mm)	Kg	List Price excl GST
 ITALY	BCE3005	Blast Chiller/Shock Freezer 3 Tray • **Takes 3 x GN1/1 pans or 3x 600mm x 400mm baking trays** • **10kg per cycle for chilling** • **5kg per cycle for freezing** • Internal dimensions 340x580x250 • 3 levels at 70mm apart, optional 35mm spacing • Stainless Steel AISI 304 • Rounded internal corners for easy cleaning • CFC free Polyurethane insulation • Easily removable stainless steel supports • Core Probe temperature reading from 90˚- 3˚C during chilling and from 90˚ to -18˚C during freezing • R404a gas • 38˚C ambient temperature • Manufacturer Code: ABF03C	240V	0.9kW	640 x 700 x 530	68kg	$ 4495.00
 ITALY	BCE5009	Blast Chiller/Shock Freezer 5 Tray • **Takes 5 x GN1/1 pans or 5x 600mm x 400mm baking trays** • **20kg per cycle for chilling** • **12kg per cycle for freezing** • Internal dimensions: 605x400x300 • 5 levels at 70mm apart, optional 35mm spacing • Stainless Steel AISI 304 • Rounded internal corners for easy cleaning • CFC free Polyurethane insulation • Easily removable stainless steel supports • Core Probe temperature reading from 90˚ - 3˚C during chilling and from 90˚ to -18˚C during freezing • R404a gas • 43˚C ambient temperature • Features hard and soft chill options • Manufacturer Code: ABF05C	240V	1.2kW	760 x 700 x 850	108kg	$ 5995.00
 ITALY	BCE5010	Blast Chiller/Shock Freezer 5 Tray • **Takes 5 x GN1/1 pans or 5x 600mm x 400mm baking trays** • **22kg per cycle for chilling** • **14kg per cycle for freezing** • Internal dimensions: • 5 levels at 70mm apart, optional 35mm spacing • Stainless Steel AISI 304 • Rounded internal corners for easy cleaning • CFC free Polyurethane insulation • Easily removable stainless steel supports • Core Probe temperature reading from 90˚ - 3˚C during chilling and from 90˚ to -18˚C during freezing • R404a gas • 43˚C ambient temperature • Features hard and soft chill options • Manufacturer Code: ABF05P	240V	1.2kW	780 x 800 x 980	128kg	$ 6495.00
 ITALY	BCE9020	Blast Chiller/Shock Freezer 10 Tray • **Takes 10 x GN1/1 pans or 10x 600mm x 400mm baking trays** • **35kg per cycle for chilling** • **25kg per cycle for freezing** • Internal dimensions: • 10 levels at 70mm apart, optional 35mm spacing • Stainless Steel AISI 304 • Rounded internal corners for easy cleaning • CFC free Polyurethane insulation • Easily removable stainless steel supports • Core Probe temperature reading from 90˚ - 3˚C during chilling and from 90˚ to -18˚C during freezing • R404a gas • 43˚C ambient temperature • Manufacturer Code: ABF10P	240V	2kW 15A	780 x 800 x 1460	173kg	$8995.00

Extended Gold Star Warranty – 2 year parts, 1 year labour.

Please note that prices for refrigeration are ex-warehouse Sydney and do not include freight.

BLAST CHILLERS / FREEZERS

	Model	Product Description	Voltage	Power	Unit Size (mm)	Kg	List Price excl GST
 ITALY	BCE9130	Blast Chiller/Shock Freezer 15 Tray • **Takes 15 x GN1/1 pans or 15x 600mm x 400mm baking trays** • **55kg per cycle for chilling** • **35kg per cycle for freezing** • Internal dimensions: • 15 levels at 70mm apart, optional 35mm spacing • Stainless Steel AISI 304 • Rounded internal corners for easy cleaning • CFC free Polyurethane insulation • Easily removable stainless steel supports • Core Probe temperature reading from 90˚ - 3˚C during chilling and from 90˚ to -18˚C during freezing • R404a gas • 43˚C ambient temperature • Supplied without plug. Needs to be installed by electrician • Manufacturer Code: ABF15P	400V 3 Phase	3.3kW	780 x 800 x 1840	218kg	$12500.00
 ITALY	BCE9220	Blast Chiller/Shock Freezer 20 Tray Self Contained • **Takes 20 x GN1/1 pans or 20x 600mm x 400mm baking trays** • **75kg per cycle for chilling** • **55kg per cycle for freezing** • Internal dimensions: 605 x 400 x 1465 • 5 levels at 70mm apart, optional 35mm spacing • Stainless Steel AISI 304 • Rounded internal corners for easy cleaning • CFC free Polyurethane insulation • Easily removable stainless steel supports • Core Probe temperature reading from 90˚ - 3˚C during chilling and from 90˚ to -18˚C during freezing • R404a gas • 43˚C ambient temperature • Features hard and soft chill options • Supplied without plug – must be installed by electrician • Manufacturer Code: ABF20P	400V 3 Phase	4kW	780 x 800 x 2180	225kg	$15500.00
 ITALY	BCE9320	Blast Chiller/Shock Freezer 20 Tray – **Remote Installation** • **Takes 2 x 20 x GN1/1 trolleys** • **1 x 20GN 2/1 trolley** • **1 x 20 600 x 400 trolley** • **1 x 20 600 x 800 trolley** • **110kg per cycle for chilling** • **85kg per cycle for freezing** • Internal dimensions: 680 x 870 x 1860 • 10 levels at 70mm apart, optional 35mm spacing • Stainless Steel AISI 304 • Rounded internal corners for easy cleaning • CFC free Polyurethane insulation • Easily removable stainless steel supports • Core Probe temperature reading from 90˚ - 3˚C during chilling and from 90˚ to -18˚C during freezing • R404a gas • 43˚C ambient temperature • Manufacturer Code: ABF20P1	400V 3 Phase	3kW	950 x 1350 x 2180 Room 1392 x 708 x 891 Condensing Unit	225kg 242kg	$26500.00

Price does not include installation

Extended Gold Star Warranty – 2 year parts, 1 year labour.

Please note that prices for refrigeration are ex-warehouse Sydney and do not include freight.



WE ALSO HAVE 40 TRAY, 80 TRAY AND 120 TRAY REMOTE BLAST CHILLERS AVAILABLE TO ORDER AT VERY COMPETITIVE PRICES. PLEASE CALL THE OFFICE FOR A QUOTE OR MORE INFORMATION.

DRYING AGEING CABINET

Model	Product Description	Voltage	Power	Unit Size (mm)	Kg	List Price excl GST
DAE0700	Seasoning/Dry Aging Cabinet • 304 18/10 Stainless Steel • 43˚C Ambient • Full control of temperature 2˚-5˚C • Full control of relative humidity 40%-95% RH • Approx 100Kg of hanging product • Approx 30 days for salami reduction • Glass door and LED lighting for food visual display • 75mm thick insulation • Internal round corners • Supplied with bars for hanging product, salami etc. and 5 shelves for cheese etc. • External condensation pan • Built-in humidifier • Automatic suction fan for air exchange • Auto defrost • Self closing doors • Key and lock standard • Manufacturer Code: STG700	240V	1800W	750 x 815 x 2100	156Kg	$ 6800.00

NEW!



Shown with hanging rods



Shown with shelves

ITALY

Please note that prices for refrigeration are ex-warehouse Sydney and do not include freight.

GELATO STORAGE

	Model	Product Description	Voltage	Power	Unit Size (mm)	Kg	List Price excl GST
 ITALY	GEL1000	Gelato Storage Cabinet 875Lt • Made from stainless steel AISI 304 18/10 • Rounded corners for easy cleaning • 60mm thick insulation • Digital controller • Automatic defrost and evaporation of condensate water • Self closing door • R404a Gas • Supplied with 5 levels of shelves which can accommodate 30 x 5lt ice cream containers. Extra shelves and guides available to increase capacity to 54 x 5lt ice cream containers • Can go down to -30˚C at ambient temperature of 32˚C or -24˚C at 40˚C ambient temperature • Manufacturer Code: 100BTV	240V	1.63kW	790 x 1000 x 2070	165kg	$ 6250.00
	XGEL0001	Shelf Guides					$ 40.00
	XGEL0002	Shelves to suit GEL1000 (2 shelves per level)			600 x 400		$ 45.00

RETARDER PROVER

	Model	Product Description	Voltage	Power	Unit Size (mm)	Kg	List Price excl GST
 ITALY	RPE0790	Retarder Prover • Controlled fermentation by accurate management of temperature, humidity and time • Can control, stop or slow fermentation of yeast for up to 72 hours • Eliminates the need for “overtime” wages • Long leavening process = more flavour and longer shelf life • AISI 304 • Rounded corners for easy cleaning • Takes 600 x 400 baking trays (2 per level • Supplied with kit for 406mm x 720mm (16” x 29”) trays (1 per level) • Humidity level up to 95% • Auto defrost and evaporation of condensate water • Self closing door • On castors • Internal light • Lock • 875 lt • Range -10˚C – +40˚C at 38˚C ambient • Glass door • Manufacturer Code: FLBN2	240V 15A	1.3kW	790 x 1000 x 2070	210kg	$8750.00

Please note that prices for refrigeration are ex-warehouse Sydney and do not include freight.

UPRIGHT REFRIGERATORS

	Model	Product Description	Voltage	Power	Unit Size (mm)	Kg	List Price excl GST
	UFI1170	Single Door Upright Fridge – 654Lt • **European design and manufacture** • On castors • Digital controller • Ambient temperature of 40˚C • High quality AISI 304/18/8-10 st/steel interior and exterior • Internal corners rounded for ease of cleaning • Self-closing door at 45˚ or less • Reversible door • R134a gas • Gastronorm size - 2 x 1 size trays (lengthways) • 60mm thick injected polyurethane insulation (CFC & HCFC free) • 22 x 1/1 x 65mm deep pans per door capacity • Supplied with 3 shelves per door • Internal usable space 550 x 660 x 1250mm • Manufacturer Code: CA170/AUS	240V	1.02kW	720 x 855 x 2095 (body is 815mm deep and evaporator tray extends 40mm = 855mm total) Castors available to reduce height to 2065mm	128kg	$ 2650.00
 GREECE	UFI1140	Double Door Upright Fridge – 1432Lt • **European design and manufacture** • On castors • Digital controller • Ambient temperature of 40˚C • High quality AISI 304/18/8-10 st/steel interior and exterior • Internal corners rounded for ease of cleaning • Self-closing door at 45˚ or less • R134a gas • Gastronorm size - 2 x 1 size trays (lengthways) • 60mm thick injected polyurethane insulation (CFC & HCFC free) • 22 x 1/1 x 65mm deep pans per door capacity • Supplied with 3 shelves per door • Internal usable space 550 x 660 x 1250mm per door • Manufacturer Code: CE1140/AUS	240V	1.56kW	1440 x 855 x 2095 (body is 815mm deep and evaporator tray extends 40mm = 855mm total) Castors available to reduce height to 2065mm	207kg	$ 3895.00

All Inomak fridges and freezers feature epoxy coated coils on the evaporator which protect against corrosive agents and bacteria found in the food zone. This increases the lifespan of the evaporator by minimizing leakages caused by corrosion.

ADDITIONAL SHELVES

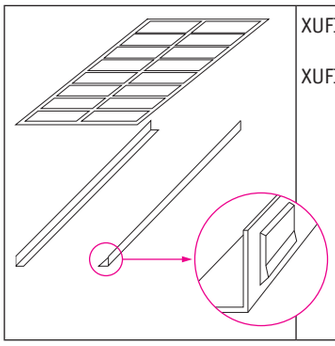	XUFI0003	Shelf GN 2/1	N/A	N/A	534 x 680	2kg	$ 45.00
	XUFI0002	Pair of GN guides 2/1	N/A	N/A	N/A		$ 25.00

Extended Gold Star Warranty – 2 year parts, 1 year labour.

Please note that prices for refrigeration are ex-warehouse Sydney and do not include freight.

UPRIGHT FREEZERS

	Model	Product Description	Voltage	Power	Unit Size (mm)	Kg	List Price excl GST
	UFI2170	Single Door Upright Freezer – 654Lt • **European design and manufacture** • On castors • Digital controller • Ambient temperature of 40˚C • High quality AISI 304/18/8-10 st/steel interior and exterior • Internal corners rounded for ease of cleaning • Self-closing door at 45˚ or less • Reversible door • R404a gas • Gastronorm size - 2 x 1 size trays (lengthways) • 60mm thick injected polyurethane insulation (CFC & HCFC free) • 12V door frame heater • 22 x 1/1 x 65mm deep pans per door capacity • Supplied with 3 shelves per door • Internal usable space 550 x 660 x 1250mm • Manufacturer Code: CB170/AUS	240V	0.79kW	720 x 855 x 2095 (body is 815mm deep and evaporator tray extends 40mm = 855mm total) Castors available to reduce height to 2065mm	115kg	$ 3195.00
 GREECE	UFI2140	Double Door Upright Freezer – 1432Lt • **European design and manufacture** • On castors • Digital controller • Ambient temperature of 40˚C • High quality AISI 304/18/8-10 st/steel interior and exterior • Internal corners rounded for ease of cleaning • Self-closing door at 45˚ or less • R404a gas • Gastronorm size - 2 x 1 size trays (lengthways) • 60mm thick injected polyurethane insulation (CFC & HCFC free) • 12V door frame heater • 22 x 1/1 x 65mm deep pans per door capacity • Supplied with 3 shelves per door • Internal usable space 550 x 660 x 1250mm per door • Manufacturer Code: CF2140/AUS	240V	1.19kW	1440 x 855 x 2095 (body is 815mm deep and evaporator tray extends 40mm = 855mm total) Castors available to reduce height to 2065mm	175kg	$ 4500.00

All Inomak fridges and freezers feature epoxy coated coils on the evaporator which protect against corrosive agents and bacteria found in the food zone. This increases the lifespan of the evaporator by minimizing leakages caused by corrosion.

PATISSERIE KIT

	XUFI6010	Kit to enable fridge/freezer to store 600 x 400 baking trays • Kits suit single or 2 door models. For 2 door unit, 2 kits are required				4.9kg	$ 295.00

Extended Gold Star Warranty – 2 year parts, 1 year labour.

Please note that prices for refrigeration are ex-warehouse Sydney and do not include freight.

UPRIGHT REFRIGERATORS

	Model	Product Description	Voltage	Power	Unit Size (mm)	Kg	List Price excl GST
NEW! 	UFI1170G	Single Glass Door Upright Fridge – 654Lt • 1/3 HP Compressor • Stainless Steel AISI 304 18/8-10 interior and exterior • Self closing doors at <45° • Heated glass • Internal LED light • 32°C Ambient • Digital controller • Rounded internal corners for easy cleaning • R134a Gas • On castors • 60mm thick injected polyurethane insulation (CFC & HCFC free) • 22 x 1/1 x 65mm deep GN pans per door capacity • Supplied with 3 shelves • Internal usable space 550 x 660 x 1250mm • Operating temp 0°C-10°C • Manufacturer Code: CAS170/GL	240V	245W	720 x 905 x 2095	128kg	$ 2875.00
NEW!  GREECE	UFI1140G	Double Glass Door Upright Fridge – 1432Lt • ½ HP Compressor • Stainless Steel AISI 304 18/8-10 interior and exterior • Self closing doors at <45° • Heated glass • Internal LED light • 32°C Ambient • Digital controller • Rounded internal corners for easy cleaning • R134a Gas • On castors • 60mm thick injected polyurethane insulation (CFC & HCFC free) • 22 x 1/1 x 65mm deep GN pans per door capacity • Supplied with 3 shelves per door • Internal usable space 550 x 660 x 1250mm per door • Operating temp 0°C-10°C • Manufacturer Code: CES2140/GL	240V	370W	1440 x 905 x 2095	207kg	$ 4675.00

All Inomak fridges and freezers feature epoxy coated coils on the evaporator which protect against corrosive agents and bacteria found in the food zone. This increases the lifespan of the evaporator by minimizing leakages caused by corrosion.

Extended Gold Star Warranty – 2 year parts, 1 year labour.
Please note that prices for refrigeration are ex-warehouse Sydney and do not include freight.

UPRIGHT FREEZERS

Model	Product Description	Voltage	Power	Unit Size (mm)	Kg	List Price excl GST
UFI2170G	Single Glass Door Upright Freezer – 654Lt • 3/4 HP Compressor • Stainless Steel AISI 304 18/8-10 interior and exterior • Self closing doors at <45° • Heated glass • Internal LED light • 32°C Ambient • Digital controller • Rounded internal corners for easy cleaning • R404a Gas • On castors • 60mm thick injected polyurethane insulation (CFC & HCFC free) • 22 x 1/1 x 65mm deep GN pans per door capacity • Supplied with 3 shelves • Internal usable space 550 x 660 x 1250mm • Operating temp 0°C to -20°C • Manufacturer Code: CBS170/GL	240V	550W	720 x 905 x 2095	128kg	$ 3500.00
UFI2140	Double Glass Door Upright Freezer – 1432Lt • 1 HP Compressor • Stainless Steel AISI 304 18/8-10 interior and exterior • Self closing doors at <45° • Heated glass • Internal LED light • 32°C Ambient • Digital controller • Rounded internal corners for easy cleaning • R404a Gas • On castors • 60mm thick injected polyurethane insulation (CFC & HCFC free) • 22 x 1/1 x 65mm deep GN pans per door capacity • Supplied with 3 shelves per door • Internal usable space 550 x 660 x 1250mm per door • Operating temp 0°C to -20°C • Manufacturer Code: CFS2140/GL	240V	735W	1440 x 905 x 2095	207kg	$ 5400.00

NEW!



NEW!



GREECE

All Inomak fridges and freezers feature epoxy coated coils on the evaporator which protect against corrosive agents and bacteria found in the food zone. This increases the lifespan of the evaporator by minimizing leakages caused by corrosion.

Extended Gold Star Warranty – 2 year parts, 1 year labour.
Please note that prices for refrigeration are ex-warehouse Sydney and do not include freight.

SINGLE DOOR DISPLAY FRIDGES & FREEZERS

Model	Product Description	Voltage	Power	Unit Size (mm)	Kg	List Price excl GST
GDJ0640	Single Glass Door **Upright Fridge** – 520Lt • 2°C to 10°C • Fully tropicalised to 40°C ambient temperature • Double glazed doors • Heated doors and frames on all models • Anti-mist function, fan cooling system • Auto-defrosting digital thermo. • On castors • 5 independent shelves per door • Self evaporating drainage • Colorbond interior / exterior • R134a gas • Manufacturer Code: PLR-TL1DC	240V	0.58kW	640 x 795 x 2060	83kg	$ 2450.00
GDJ0641	Single Glass Door **Upright Freezer** – 520Lt • 0°C to -18°C • Fully tropicalised to 40°C ambient temperature • Triple glazed doors • Heated doors and frames on all models • Anti-mist function, fan cooling system • Auto-defrosting digital thermo. • On castors • 5 independent shelves per door • Self evaporating drainage • Colorbond interior / exterior • R404a gas • Manufacturer Code: PLR-TL1DF	240V	0.889kW	640 x 795 x 2060	89kg	$ 3195.00

NOW WITH LED TUBES



TAIWAN

DOUBLE DOOR DISPLAY FRIDGES & FREEZERS

GDJ1260	Double Glass Door **Upright Fridge** – 1000Lt • 2°C to 10°C • Fully tropicalised to 40°C ambient temperature • Double glazed doors • Heated doors/frames all models • Anti-mist function, fan cooling system • Auto-defrosting digital thermo. • On castors • 5 independent shelves per door • Self evaporating drainage • Colorbond interior / exterior • R134a gas • Manufacturer Code: PLR-TL2DC	240V	0.864kW	1260x795x2060	149kg	$ 3350.00
GDJ1261	Double Glass Door **Upright Freezer** – 1000Lt • 0°C to -18°C • Fully tropicalised to 40°C ambient temperature • Triple glazed doors • Heated doors/frames all models • Anti-mist function, fan cooling system • Auto-defrosting digital thermo. • On castors • 5 independent shelves per door • Self evaporating drainage • Colorbond interior / exterior • 404a gas • Manufacturer Code: PLR-TL2DF	240V	1.407kW	1270x805x2060	168kg	$ 5250.00

NOW WITH LED TUBES



TAIWAN

Please note that prices for refrigeration are ex-warehouse Sydney and do not include freight.

THREE DOOR DISPLAY FRIDGES & FREEZERS

Model	Product Description	Voltage	Power	Unit Size (mm)	Kg	List Price excl GST
GDJ1880	Three Glass Door **Upright Fridge** – 1610Lt • 2°C to 10°C • Fully tropicalised to 40°C ambient temperature • Double glazed doors • Heated doors/frames all models • Anti-mist function, fan cooling system • Auto-defrosting digital thermo. • On castors • 5 independent shelves per door • Self evaporating drainage • Colorbond interior / exterior • R134a gas • Manufacturer Code: PLR-TL3DC	240V	1.63kW	1900 x 800 x 2060	220kg	$ 4750.00
GDJ1881	Three Glass Door **Upright Freezer** – 1500Lt • 0°C to -18°C • Fully tropicalised to 40°C ambient temperature • Triple glazed doors • Heated doors/frames all models • Anti-mist function, fan cooling system • Auto-defrosting digital thermo. • On castors • 5 independent shelves per door • Self evaporating drainage • Colorbond interior / exterior • 404a gas • Manufacturer Code: PLR-TL3DF	240V	1.94kW	1900 x 800 x 2060	243kg	$ 7250.00





TAIWAN

UNDER BAR DRAWER FRIDGES

UBD2000	1 Door 2 Drawers • Manufacturer Code: PN29	240V	0.77kW	1345 x 700 x 870	120kg	$ 3295.00
UBD4000	1 Door 4 Drawers • Manufacturer Code: PN229	240V	0.77kW	1790 x 700 x 870	158kg	$ 3795.00
UBD6000	1 Door 6 Drawers • European design & manufacture • On castors • Digital controller • Ambient temperature of 40˚C • Stainless steel interior/exterior • Internal corners rounded for ease of cleaning • Fits gastronorm trays in drawers and door up to 150mm deep • Manufacturer Code: PN2229	240V	1.02kW	2240 x 700 x 870	197kg	$ 4400.00



GREECE

All Inomak fridges and freezers feature epoxy coated coils on the evaporator which protect against corrosive agents and bacteria found in the food zone. This increases the lifespan of the evaporator by minimizing leakages caused by corrosion.

Extended Gold Star Warranty – 2 year parts, 1 year labour.

Please note that prices for refrigeration are ex-warehouse Sydney and do not include freight.

WHEN COMPARING UNDERBARS, ALWAYS CHECK VOLUME IN LITRES

SLIMLINE UNDERBARS

Model	Product Description	Voltage	Power	Unit Size (mm)	Kg	List Price excl GST
	SLIMLINE UNDERBARS 660mm DEEP ★  SOUTH AFRICA						
UBS6120	**Slimline Under Bar** (1½ Stainless Steel Doors) 1200mm – **295lt**	240V	0.74kW	1200 x **660** x 900	110kg	$ 2695.00
UBS6180	**Slimline Under Bar** (2½ Stainless Steel Doors) 1800mm – **480lt**	240V	0.74kW	1800 x **660** x 900	130kg	$ 2995.00
UBS6240	**Slimline Under Bar** (3½ Stainless Steel Doors 2400mm – **693lt** • 2 lockable, 2 free running castors • Stainless steel countertop • Stainless steel back & sides • Self closing doors • 35˚C ambient at 70% RH • Heated door mullions • Dixell controller	240V	0.77kW	2400 x **660** x 900	160kg	$ 3995.00

UNDERBAR ~ STAINLESS STEEL DOORS

★  SOUTH AFRICA						
UBS1800	**Stainless Steel Under Bar** (2½ St/Steel Doors) 1800mm – **610Lt**	240V	0.74kW	1800 x 760 x 900	145kg	$ 2995.00
UBS2400	**Stainless Steel Under Bar** (3½ St/Steel Doors) 2400mm – **886Lt** • 2 lockable, 2 free running castors • Stainless steel countertop • Stainless steel back & sides • Self closing doors • 35˚C ambient at 70% RH • Heated door mullions • Dixell controller	240V	0.77kW	2400 x 760 x 900	175kg	$ 3995.00

UNDERBAR ~ GLASS DOORS

★  SOUTH AFRICA						
UBG1200	**Under Bar** (1½ Glass Doors) 1200mm – **360Lt**	240V	0.8kW	1200 x 760 x 900	115kg	$ 2895.00
UBG1800	**Under Bar** (2½ Glass Doors) 1800mm – **610Lt**	240V	0.8kW	1800 x 760 x 900	145kg	$ 3350.00
UBG2400	**Under Bar** (3½ Glass Doors) 2400mm – **886Lt** • 2 lockable, 2 free running castors • Fluoro illuminated • St/steel countertop, back & sides • Self closing doors • 35˚C ambient at 70% RH • Heated door mullions • Dixell controller	240V	0.82kW	2400 x 760 x 900	175kg	$ 4150.00

BACK BARS

BACK BAR SERIES 610mm DEEP ★  SOUTH AFRICA						
UBG6180	**Back Bar** 1800mm – **535lt** • 610mm deep	240V	0.8kW	1800 x 610 x 985	165kg	$ 3850.00
UBG6240	**Back Bar** 2400mm – **763lt** • 610mm deep • 2 shelves per door (can hold 3 rows of stubbies per door) • Castor height 90mm	240V	0.82kW	2400 x 610 x 985	185kg	$ 4450.00

Extended Gold Star Warranty – 2 year parts, 1 year labour.

Please note that prices for refrigeration are ex-warehouse Sydney and do not include freight.

PIZZA BARS

	Model	Product Description	Voltage	Power	Unit Size (mm)	Kg	List Price excl GST
 Note: these units do not come with pans SOUTH AFRICA	UBP1800	**Pizza Bar** (2½ Doors) 1800mm – **440lt**	240V	0.9kW	1800 x 840 x 1100	150kg	$ 4990.00
	UBP2400	**Pizza Bar** (3½ Doors) 2400mm – **630lt** • Stainless steel front back & sides • Stainless steel fridge doors • Insulated night lids • 2 lockable, 2 free running castors • Rack for working on trays • Air over top cooling • Spacers for diff. config. of pans • 9 x 1/3 inserts - 1800mm 12 x 1/3 inserts - 2400mm • 35°C ambient at 70% RH	240V	1.25kW	2400 x 840 x 1100	180kg	$ 5990.00

SHELVES FOR 'ANVIL' UNDERBARS

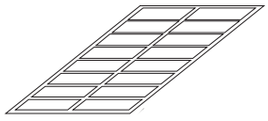		Shelves for UBS & UBG (not 6 Series):					
	XUBS0540	580x540mm (suits RH doors)	N/A	N/A	580 x 540 x 10	4kg	$ 65.00
	XUBS0570	580x570mm (suits other doors)	N/A	N/A	580 x 570 x 10	4kg	$ 65.00
		Shelves for UBG 6 Series:					
	XUBS0588	540x430mm (suits RH door)	N/A	N/A	540 x 430 x 10	4kg	$ 65.00
	XUBS0586	570x430mm (suits other doors)	N/A	N/A	570 x 430 x 10	4kg	$ 65.00
		Shelves for UBP:					
	XUBS0530	540x440mm (suits Pizza RH door)	N/A	N/A	540 x 440 x 10	4kg	$ 65.00
	XUBS0520	570x440mm (suits other Pizza doors)	N/A	N/A	570 x 440 x 10	4kg	$ 65.00
	XUBS0002	Shelf Clip - set of 4	N/A	N/A	-	-	$16.00

CASTORS FOR UNDERBARS & PIZZA BARS

	XUBS0028	Small Castors with Brakes • These castors reduce the overall height of the fridges from 900mm to 870mm in order to fit under a counter • Fits all fridges with codes starting with UBS, UBG, UBP as well as UFI and UBD range					$ 28.00
	XUBS0034	Small Castors with no Brakes • Fits all fridges with codes starting with UBS, UBG, UBP as well as UFI and UBD range					$ 24.00
	XUBS0031	Tiny Castors with Brakes • These castors reduce the overall height of the fridges from 900mm to 847mm in order to fit under a counter • Fits all fridges with codes starting with UBS, UBG, UBP as well as UFI and UBD range					$ 28.00
	XUBS0030	Tiny Castors with no Brakes • Fits all fridges with codes starting with UBS, UBG, UBP as well as UFI and UBD range					$ 24.00

Extended Gold Star Warranty – 2 year parts, 1 year labour.
Please note that prices for refrigeration are ex-warehouse Sydney and do not include freight.

UNDERBENCH FRIDGE & FREEZER

	Model	Product Description	Voltage	Power	Unit Size (mm)	Kg	List Price excl GST
 CHINA	FBC0200	Single Door Fridge 170lt • Stainless steel exterior • Reversible door • Adjustable feet at front, castors at rear • R134a gas • Auto defrost • Digital control Dixell • Door lock standard • 3 adjustable shelves • 35˚C ambient • Holds 23 x 2lt milk cartons • Food safe plastic interior • Interior dimension: Width 505mm Depth 425mm Height 655mm Step at back 130mm deep x 230mm high • Manufacturer Code: RCX200	240V	0.096kW	593 x 620 x 832	49kg	$850.00
	FBCG1200	Single Door Fridge with Glass Door 170lt • Double glazed • Internal LED light • Manufacturer Code: RCXG200	240V	0.096kW	593 x 620 x 832	51kg	$ 895.00
 CHINA	FBF0201	Single Door Freezer 170lt • Stainless steel exterior • Reversible door • Adjustable feet at front, castors at rear • R134a gas • Digital control Dixell • Door lock standard • 3 fixed shelves • 35˚C ambient • Food safe plastic interior • Interior dimension: 659 x 480 x414 • Manufacturer Code: RNX200	240V	0.13kW	593 x 620 x 832	51kg	$ 895.00
	FBFG1201	Single Door Freezer with Glass Door 170lt • Triple glazed • Manufacturer Code: RNXG200	240V	0.13kW	593 x 620 x 832	51kg	$ 995.00

Please note that prices for refrigeration are ex-warehouse Sydney and do not include freight.

COUNTER TOP ICE CREAM FREEZERS

	Model	Product Description	Voltage	Power	Unit Size (mm)	Kg	List Price excl GST
 ITALY	CFT0002	Ice Cream Freezer Piccolo • Takes 2 x 6.5 or 7.7lt ice cream containers • 0˚C to -18˚C • R404a gas – 120g • Body in ABS • Copper evaporator • Silent operation • Low energy consumption • Easy to clean • ECO insulation CFC free • 30˚C ambient temperature • Pans not included • Manufacturer Code: PICCOLO	240V	0.4kW	505 x 680 x 400	25kg	$ 1995.00
 ITALY	CFT0004	Ice Cream Freezer Baby • Takes 4 x 5lt ice cream containers • 0˚C to -18˚C • R404a gas – 120g • Body in ABS • Copper evaporator • Silent operation • Low energy consumption • Easy to clean • ECO insulation CFC free • 30˚C ambient temperature • Pans not included • Manufacturer Code: BABY	240V	0.5kW	925 x 505 x 620	32kg	$ 2650.00

COUNTER TOP INGREDIENT FRIDGE

 ITALY	CIT0001	Counter Top Ingredient Fridge • Accommodates a full size 1/1 gastronorm pan x 150mm deep or any combination of 1/2, 1/3, 1/6 or 1/9 size pans • Copper evaporator • Low noise level • Pans not included • R134a gas – 100g • Eco insulation CFC free • Easy to clean • Manufacturer Code: GASTRO	240V	0.13kW	600 x 400 x 370	13kg	$ 1250.00

SUSHI DISPLAY FRIDGES

	SDS1448	Sushi Display Fridge with Cross Fin Coil • 6 x third size containers included (25mm deep) • Manufacturer Code: 9842LA6S	240V	0.2kW	1424 x 395 x 251	50kg	$ 2850.00
 SPAIN	SDS1776	Sushi Display Fridge with Cross Fin Coil • Electronic thermostat with digital display • Rapid cool down time • 8 x third size containers included (25mm deep) • R134a gas • Silent 0.25Hp Hermetic compressor with double ventilated condensor • Tilting front glass for easy cleaning • Manufacturer Code: 9842LA8S	240V	0.2kW	1776 x 395 x 251	65kg	$ 3300.00

Please note that prices for refrigeration are ex-warehouse Sydney and do not include freight.

SQUARE GLASS FLOOR MODEL COLD

MEPS APPROVED

Model	Product Description	Voltage	Power	Unit Size (mm)	Kg	List Price excl GST
DSV0730	Showcase Straight Glass (285Lt) - Cold 900mm • Manufacturer Code: M730V	240V	0.644kW	900 x 680 x 1195	185kg	$ 3695.00
DSV0740	Showcase Straight Glass (390Lt) - Cold 1200mm • Manufacturer Code: M740V	240V	0.711kW	1200 x 680 x 1195	225kg	$ 3950.00
DSV0750	Showcase Straight Glass (500Lt) - Cold 1500mm • Manufacturer Code: M750V	240V	0.859kW	1500 x 680 x 1195	260kg	$ 4450.00
DSV0760	Showcase Straight Glass (610Lt) - Cold 1800mm • Manufacturer Code: M760V	240V	1.045kW	1800 x 680 x 1195	300kg	$ 4950.00



Front View

CHINA

- **All cold vertical cabinets** have heated front and top glass and hot air blown onto side glass to prevent condensation
- Double glazed side panels and doors
- Ambient temperature: 32°C at 82% R.H.
- **LED strip lighting**
- Removable filter on condenser for easy cleaning
- Electronic temperature control and display
- Ventilated cooling system
- Automatic defrost
- Adjustable shelves

HOT (40˚C - 75˚C)

Model	Product Description	Voltage	Power	Unit Size (mm)	Kg	List Price excl GST
DHV0730	Straight Glass (285Lt) - Hot 900mm • Manufacturer Code: H730V	240V	0.897kW	900 x 680 x 1195	165kg	$ 2750.00
DHV0740	Straight Glass (390Lt) - Hot 1200mm • Manufacturer Code: H740V	240V	0.990kW	1200 x 680 x 1195	205kg	$ 3300.00
DHV0750	Straight Glass (500Lt) - Hot 1500mm • Manufacturer Code: H750V	240V	1.056kW	1500 x 680 x 1195	240kg	$ 3650.00



Rear View
CHINA

*Dimensions are a guide only

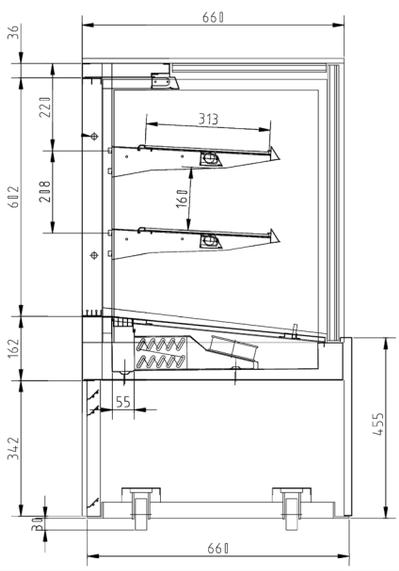

Vertical

DSV0730 900mm
DSV0740 1200mm
DSV0750 1500mm
DSV0760 1800mm

Shelf Length (Top and Middle)

DSV0730 730mm
DSV0740 1030mm
DSV0750 1330mm
DSV0760 1630mm

Extended Gold Star Warranty – 2 year parts, 1 year labour.

Please note that prices for refrigeration and displays (hot or ambient) are ex-warehouse Sydney and do not include freight.

MEPS APPROVED

CURVED GLASS FLOOR MODEL COLD

Model	Product Description	Voltage	Power	Unit Size (mm)	Kg	List Price excl GST
DSC0730	Showcase Curved Glass (225Lt) - Cold 900mm • Manufacturer Code: M730	240V	0.616kW	900 x 680 x 1200	165kg	$ 3695.00
DSC0740	Showcase Curved Glass (310Lt) - Cold 1200mm • Manufacturer Code: M740	240V	0.695kW	1200 x 680 x 1200	200kg	$ 3950.00



CHINA

- **All cold cabinets** have heated front glass and hot air blown onto side glass to prevent condensation
- Double glazed side panels and doors
- Ambient temperature: 32°C at 82% R.H.
- **LED strip lighting**
- Removable filter on condenser for easy cleaning
- Electronic temperature control and display
- Ventilated cooling system
- Automatic defrost
- Adjustable shelves

HOT (40˚C - 75˚C)

Model	Product Description	Voltage	Power	Unit Size (mm)	Kg	List Price excl GST
DHC0730	Showcase Curved Glass (225Lt) - Hot 900mm • Manufacturer Code: H730	240V	0.897kW	900 x 680 x 1200	145kg	$ 2750.00
DHC0740	Showcase Curved Glass (310Lt) - Hot 1200mm • Manufacturer Code: H740	240V	0.990kW	1200 x 680 x 1200	180kg	$ 3300.00
DHC0750	Showcase Curved Glass (395Lt) - Hot 1500mm • Manufacturer Code: H750	240V	1.056kW	1500 x 680 x 1200	205kg	$ 3650.00



Rear View
CHINA

*Dimensions are a guide only

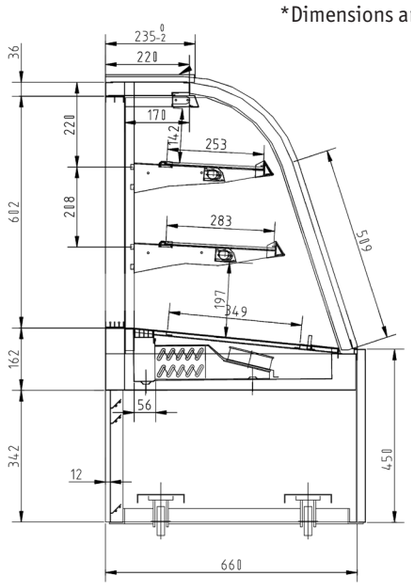

Curved

DSC0730	900mm
DSC0740	1200mm
DSC0750	1500mm
DSC0760	1800mm

Shelf Length (Top and Middle)

DSC0730	730mm
DSC0740	1030mm
DSC0750	1330mm
DSC0760	1630mm

Extended Gold Star Warranty – 2 year parts, 1 year labour.

Please note that prices for refrigeration and displays (hot or ambient) are ex-warehouse Sydney and do not include freight.

COLD CAKE DISPLAY – 4 TIER

	Model	Product Description	Voltage	Power	Unit Size (mm)	Kg	List Price excl GST
 CHINA	DSV0830	4 Tier Cold Cake Display – 900mm wide – 395lt capacity • Heated front and top glass and hot air blown onto side glass to prevent condensation • Double glazed side panels and doors • Ambient temperature: 32˚C at 82% R.H. • LED strip lighting • Auto defrost • Electronic temperature control and display • Ventilated cooling system • Adjustable shelves • Manufacturer's Code: GL830V	240V	0.639kW	900 x 750 x 1350	215kg	$ 3850.00
	DSV0840	4 Tier Cold Cake Display – 1200mm wide – 540lt capacity • Manufacturer's Code: GL840V	240V	0.828kW	1200 x 750 x 1350	260kg	$ 3995.00
	DSV0850	4 Tier Cold Cake Display – 1500mm wide – 685lt capacity • Manufacturer's Code: GL850V	240V	1.037kW	1500 x 750 x 1350	305kg	$ 4750.00
	DSV0860	4 Tier Cold Cake Display – 1800mm wide – 830lt capacity • Manufacturer's Code: GL860V	240V	1.109kW	1800 x 750 x 1350	350kg	$ 5250.00

HOT DISPLAY 4 TIER

	Model	Product Description	Voltage	Power	Unit Size (mm)	Kg	List Price excl GST
Image as above but wire grid shelving CHINA	DHV0830	4 Tier Hot Display – 900mm wide – 395lt Capacity • Manufacturer's Code: H-GL830V	240V	0.957kW	900 x 750 x 1350	200kg	$ 2995.00
	DHV0840	4 Tier Hot Display – 1200mm wide – 540lt Capacity • Manufacturer's Code: H-GL840V	240V	1.073kW	1200 x 750 x 1350	240kg	$ 3450.00

REFRIGERATED JUICE DISPENSERS ~ STIRRER TYPE

	Model	Product Description	Voltage	Power	Unit Size (mm)	Kg	List Price excl GST
 CHINA	JDA0001	Single Bowl Juice Dispenser • Clear food grade polycarbonate bowl (12lt) which is removable for easy cleaning • Manufacturer Code: COROLLA-1S	240V	0.268kW	230 x 430 x 635	19kg	$ 875.00
 CHINA	JDA0002	Double Bowl Juice Dispenser • Clear food grade polycarbonate bowls (2 x 12lt) which are removable for easy cleaning • Stirrer makes unit suitable for milk-based products and juice with pulp • 2-piece non-drip st/steel tap • Manufacturer Code: COROLLA-2S	240V	0.291kW	430 x 430 x 635	28kg	$ 1150.00

Extended Gold Star Warranty – 2 year parts, 1 year labour.

Please note that prices for refrigeration and displays (hot or ambient) are ex-warehouse Sydney and do not include freight.

COLD CAKE DISPLAY – 4 TIER

	Model	Product Description	Voltage	Power	Unit Size (mm)	Kg	List Price excl GST
 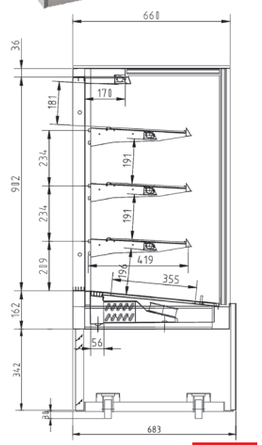 CHINA	DSV4730	4 Tier Cold Display – 900mm wide – 410lt capacity • Heated front and top glass and hot air blown onto side glass to prevent condensation • Double glazed side panels and doors • Ambient temperature: 32˚C at 82% R.H. • **LED strip lighting** • Electronic temperature control and display • Ventilated cooling system • Automatic defrost • Adjustable shelves • Manufacturer's Code: GM730V	240V	0.679kW	900 x 680 x 1500	240kg	$ 3995.00
	DSV4740	4 Tier Cold Display – 1200mm wide – 560lt capacity • Manufacturer's Code: GM740V	240V	0.864kW	1200 x 680 x 1500	280kg	$ 4150.00
	DSV4750	4 Tier Cold Display – 1500mm wide – 710lt capacity • Manufacturer's Code: GM750V	240V	1.046kW	1500 x 680 x 1500	320kg	$ 4850.00

COUNTERTOP CURVED SHOWCASE – COLD

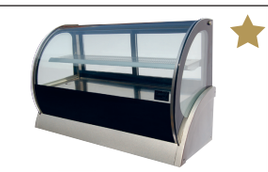 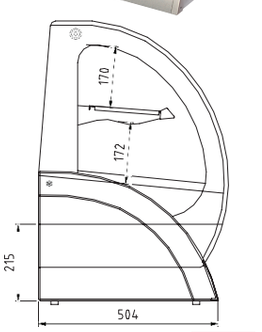 CHINA	DGC0530	Countertop Showcase 900mm (115Lt) • Digital electronic thermostat, auto defrost, defogging function • 304 stainless steel interiors • **LED strip lighting** • Low noise • Temp diff. among shelves 1˚-2˚C • Ambient temp at 32˚C, R.H 82% • Gas R134A • 2˚C - 8˚C • Modern style and design • Gastronorm size • Manufacturer's Code: S530A	240V	0.415kW	900 x 540 x 790	95kg	$ 2695.00
	DGC0540	Countertop Showcase 1200mm (155Lt) • Manufacturer's Code: S540A	240V	0.554kW	1200 x 540 x 790	115kg	$ 2950.00
	DGC0550	Countertop Showcase 1500mm (200Lt) • Manufacturer's Code: S550A	240V	0.585kW	1500 x 540 x 790	136kg	$ 3250.00

HOT (+40˚C to + 75˚C)

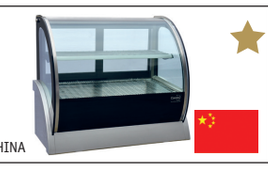 CHINA	DGHC0530	Countertop Showcase 900mm (115Lt) • Manufacturer's Code: H-S530A	240V	0.853kW	900 x 540 x 790	80kg	$ 2400.00
	DGHC0540	Countertop Showcase 1200mm (155Lt) • Manufacturer's Code: H-S540A	240V	0.893kW	1200 x 540 x 790	99kg	$ 2600.00

Extended Gold Star Warranty – 2 year parts, 1 year labour.

Please note that prices for refrigeration and displays (hot or ambient) are ex-warehouse Sydney and do not include freight.

COUNTERTOP SQUARE SHOWCASE – COLD

Model	Product Description	Voltage	Power	Unit Size (mm)	Kg	List Price excl GST
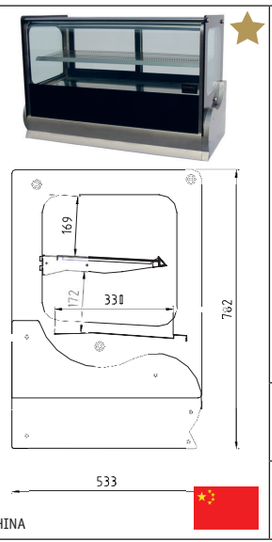 CHINA						
DGV0530	Countertop Showcase 900mm (140Lt) • Digital electronic thermostat, auto defrost, defogging function • 304 stainless steel interiors • **LED strip lighting** • Low noise • Temp diff. among shelves 1˚-2˚C • Ambient temp at 32˚C, R.H 82% • Gas R134A • 2˚C – 8˚C • Modern style and design • Gastronorm size • Manufacturer's Code: A530V	240V	0.443kW	900 x 540 x 790	102kg	$ 2695.00
DGV0540	Countertop Showcase 1200mm (190Lt) • Manufacturer's Code: A540V	240V	0.601kW	1200 x 540 x 790	122kg	$ 2950.00
DGV0550	Countertop Showcase 1500mm (240Lt) • Manufacturer's Code: A550V	240V	0.638kW	1500 x 540 x 790	145kg	$ 3250.00

COUNTERTOP SQUARE SHOWCASE – HOT (+40˚C to + 75˚C)

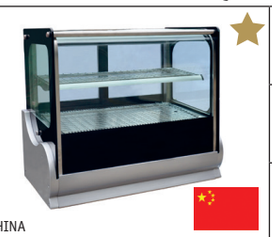 CHINA						
DGHV0530	Countertop Showcase 900mm (140Lt) • Manufacturer's Code: H-A530V	240V	0.853kW	900 x 540 x 790	80kg	$ 2400.00
DGHV0540	Countertop Showcase 1200mm (190Lt) • Manufacturer's Code: H-A540V	240V	0.893kW	1200 x 540 x 790	100kg	$ 2600.00
DGHV0550	Countertop Showcase 1500mm (240Lt) • Manufacturer's Code: H-A550V	240V	0.933kW	1500 x 540 x 790	120kg	$ 2950.00

ICE CREAM DISPLAYS – SHOWCASE & FREEZER

NEW!

 CHINA						
DSI0530	Countertop Showcase Freezer (140Lt) • 4 x ⅓ size GN pans 100mm deep (4 x clear polycarbonate supplied) • Perfect for scoop or prepacked ice cream • Heated front glass • Auto defrost • Grade 304 Stainless Steel • **LED strip lighting** • 30˚C ambient temperature • Manufacturer's Code: F-A530V	240V	0.42kW	900 x 540 x 790	108kg	$ 3650.00
DSI0540	Countertop Showcase Freezer (190Lt) • 5 x ⅓ size GN pans 100mm deep (5 x clear polycarbonate supplied) • Manufacturer's Code: F-A540V	240V	0.48kW	1200 x 540 x 790	130kg	$ 3850.00
DSI0550	Countertop Showcase Freezer (240Lt) • 7 x ⅓ size GN pans 100mm deep (7 x clear polycarbonate supplied) • Manufacturer's Code: F-A550V	240V	0.573kW	1500 x 540 x 790	152kg	$ 4350.00

Extended Gold Star Warranty – 2 year parts, 1 year labour.

Please note that prices for refrigeration and displays (hot or ambient) are ex-warehouse Sydney and do not include freight.

ICE CREAM MACHINES

	Model	Product Description	Voltage	Power	Unit Size (mm)	Kg	List Price excl GST
 ITALY	IMM0001	L1 Mini • Capacity: 0.7kg per batch • Stirrer speed: 56rpm • Production: up to 2kg/h* • Manufacturer Code: MINI	240V	0.15kW	270 x 450 x 300	18kg	$ 1195.00
 ITALY	IMM0002	L2 Stella • Capacity: 1.5kg per batch • Stirrer speed: 84rpm • Production: up to 4.5kg/h* • Manufacturer Code: STELLA	240V	0.3kW	510 x 350 x 310	31kg	$ 1995.00
 ITALY	IMM0003	L3 Giardino • Capacity: 2.5kg per batch • Stirrer speed: 76rpm • Production: up to 8kg/h* • Manufacturer Code: GIARDINO	240V	0.56kW	620 x 420 x 430	62kg	$ 4350.00
 ITALY	IMM0003R	L3R Club • Capacity: 2.5kg per batch • Stirrer speed: 76rpm • Production: up to 8kg/h* • Manufacturer Code: CLUB	240V	0.56kW	420 x 450 x 850	65kg	$ 4350.00
 ITALY	IMM0004	L4 Consul • Capacity: 3.5kg per batch • Stirrer speed: 80rpm • Production: up to 12kg/h* • Manufacturer Code: CONSUL	240V	1.1kW	440 x 600 x 850	105kg	$ 6950.00

Extended Gold Star Warranty – 2 year parts, 1 year labour.

*Production capacity is a guide only and can vary depending on sugar content, alcohol content, ambient temperature and other factors.

Please note that prices for refrigeration are ex-warehouse Sydney and do not include freight.

VACUUM PACK MACHINES

Out-of-Chamber Models

use with channel bags only (VBC)

	Model	Product Description	Voltage	Power	Unit Size (mm)	Kg	List Price excl GST
 ITALY	VME0001	Eco-Vac Domestic • For use only with Channel bags • Filter for pump protection • Not suitable for liquids • Manufacturer Code: ECO VAC	240V	0.4kW	360 x 265 x 126	3.5kg	$ 295.00
 ITALY	VMB0001	Vacuum Sealer Domestic • For use only with Channel bags • Filter for pump protection • Automatic sealing • Not suitable for liquids • Manufacturer Code: PROFESSIONAL FAMILY	240V	0.4kW	360 x 265 x 126	3.5kg	$ 450.00
 ITALY	VMF0001	Fast Vac • For use only with Channel bags • Automatic sealing • Internal filter system • Full stainless steel body • Not suitable for liquids • Manufacturer Code: FAST VAC	240V	0.45kW	375 x 297 x 145	8kg	$ 550.00

VACUUM SEALERS – CHAMBER MODELS

use with regular bags (VBP) or (VBS) Cooking Bags

 ITALY	VM0030E	Vacuum Sealing EVOX • 8m³/h pump • Chamber size: 355 x 365 x 184 • Sealing bar size: 306mm • 2 vacuum levels – storage/ cooking • 4 sealing settings • Manufacturer Code: EVOX	240V	0.45kW	495 x 600 x 288	29kg	$ 2650.00
 ITALY	VM00315	Vacuum Sealer Commercial - VM315 • 8m³/h pump • Chamber size: 330 x 335 x 100 • Sealing bar size: 315mm • Manufacturer Code: VM315	240V	0.45kW	435 x 420 x 325	32kg	$ 3150.00
	XVM0 2070	• Sloping shelf for liquids (optional)					$ 95.00

VACUUM SEALER

Chamber Models

use with regular bags (VBP) or (VBS) Cooking Bags

	Model	Product Description	Voltage	Power	Unit Size (mm)	Kg	List Price excl GST
 ITALY	VM00012	Vacuum Sealer Commercial - VM12 • 8m³/h pump • Chamber size: 290 x 400 x 160 • Sealing bar size: 270mm • Manufacturer Code: VM12	240V	0.45kW	405 x 520 x 370	36kg	$ 3950.00
	XVM0 2071	• Sloping shelf for liquids (optional)					$ 95.00
 ITALY	VM00016	Vacuum Sealer Commercial - VM16 • 12m³/h pump • Chamber size: 337 x 460 x 165 • Sealing bar size: 315mm • Manufacturer Code: VM16	240V	0.75kW	439 x 550 x 460	51kg	$ 4995.00
		Gas flush as optional extra					$ 570.00
	XVM0 2072	• Sloping shelf for liquids (optional)					$ 125.00
 ITALY	VM00018	Vacuum Sealer Commercial - VM 18 • 25m³ pump. • Chamber size: 438 x 435 x 210 • Sealing bar size: 420mm • Manufacturer Code: VM18	240V	1.2kW	565 x 580 x 510	80kg	$6995.00
		Gas flush as optional extra					$ 700.00
	XVM0 2073	• Sloping shelf for liquids (optional)					$ 135.00
 ITALY	VM00053	Vacuum Sealer Commercial - VM 53 • 25m³ pump. • Chamber size: 485 x 550 x 175 • Dual sealing bars 520mm each down left and right sides of chamber • Manufacturer Code: VM53	240V	1.5kW	600 x 710 x 500	96kg	$8800.00
 ITALY	VM00020	Vacuum Sealer Commercial - VM 20 • 60m³ pump. • Chamber size: 650 x 535 x 200 • Sealing bar size: 2 x 505mm • Dual bars. • Standard with gas flush. • Standard with soft air. • Supplied without plug. Needs to be installed by electrician • Manufacturer Code: VM20	400V 3Ph	N/A	765 x 710 x 1050	167kg	$13995.00

SOUS VIDE VACUUM SEALERS

	Model	Product Description	Voltage	Power	Unit Size (mm)	Kg	List Price excl GST
 ITALY	VMOSV31	Vacuum Sealer Commercial Sous Vide - SV31 • 12m³ pump. • Chamber size: 344 x 432 x 165 (+190mm deep channel in front of sealing bar for liquids, sauces, etc.) • Sealing bar size: 315mm • Digital controls. • Single stamp for embossing date and batch number on bag • Gas flush option included • Manufacturer Code: SV31	240V	0.75kW	465 x 583 x 445	58kg	$7250.00
 ITALY	VMOSV41	Vacuum Sealer Commercial - SV41 • 25m³ pump. • Chamber size: 435 x 500 x 180 (190mm deep Channel in front of sealing bar for liquids, sauces, etc.) • Sealing bar size: 420mm • Double date stamp for embossing date and batch number onto bag • Gas flush option included • Manufacturer Code: SV41	240V	1.2kW	545 x 605 x 495	96kg	$8995.00

VACUUM BAGS

VACUUM BAG SIZES		Packets per carton	Price per packet of 100		
VBP1422	140 x 220mm	10	$ 8.00		for use in Chamber Models 20/70 – 90µ Polyamide/Polyethylene Maximum temperature 70˚C.
VBP1823	180 x 230mm	10	$10.00		
VBP2025	200 x 250mm	10	$13.00		
VBP2030	200 x 300mm	10	$15.00	up to 1.0lt	
VBP2535	250 x 350mm	10	$22.00	up to 1.5lt	
VBP3045	300 x 450mm	5	$35.00	up to 4.0lt	
VBP4060	400 x 600mm	5	$55.00	up to 6.0lt	

CHANNEL BAG SIZES		Packets per carton	Price per packet of 100	
VBC1623	160 x 230mm	25	$17.00	for use in Out-of-Chamber Models 20/80 – 100µ Polyamide/Polyethylene Maximum temperature 70˚C.
VBC1530	150 x 300mm	20	$20.00	
VBC2025	200 x 250mm	18	$24.00	
VBC2030	200 x 300mm	16	$28.00	
VBC2535	250 x 350mm	10	$38.00	
VBC2545	250 x 450mm	7	$55.00	
VBC3040	300 x 400mm	8	$65.00	

COOKING BAG SIZES		Packets per carton	Price per packet of 100	
VBS1520	150 x 200mm	10	$12.00	for use in Chamber Model machines 15/65 – 80µ Polyamide/Polyethylene for Sous Vide can handle up to 115˚C.
VBS2030	200 x 300mm	10	$24.00	
VBS2535	250 x 350mm	10	$35.00	
VBS3040	300 x 400mm	5	$44.00	

1. 1.1 The Terms of Trade govern all orders placed by the Applicant and apply to and form part of any contract for the supply of Goods by the Company to the Applicant.

1.2 These Terms of Trade replace any previous terms and conditions of trade.

2. 2.1 No quotation given by the Company to the Applicant shall constitute an offer.

2.2 Orders must be placed by purchase order issued by the Applicant. Any order from the Applicant for the supply of Goods shall not be binding on the Company until accepted by the Company.

2.3 Orders must be accompanied by necessary ordering information as requested by the Company.

2.4 The prices for the Goods may be varied to the Company's general prices in effect at the requested date of delivery of the Goods notwithstanding any prior orders or sales order acceptances in respect of the Goods.

2.5 Prices given in any quotation are applicable to that quotation only and will not apply in any other instance.

2.6 Quotations are valid for a period of 30 days from the date of issue by the Company, unless otherwise agreed in writing.

2.7 Unless expressly included, the prices given in any quotation, price list or any Invoice and the consideration for any supply under or in connection with the Terms of Trade, do not include GST.

2.8 Prices for the Goods will be as stated in each Invoice and are subject to change without notice.

3. These Terms of Trade apply to the Applicant and to the Company in respect of Goods ordered by the Applicant. Any terms and conditions set out in the Applicant's order deviating from or inconsistent with these Terms of Trade will not bind the Company notwithstanding any statement by the Applicant in its order that its terms and conditions shall prevail over these Terms of Trade. No variation or modification or substitution of these Terms of Trade shall be binding on the Company unless specifically accepted by the Company in writing.

4. The Company accepts no liability for Goods supplied by any third party who has not purchased the Goods directly from the Company.

5. 5.1 In relation to deliveries within the Company's nominated metropolitan distribution areas, for orders over $250.00 (exclusive of GST), the Company shall arrange for the Goods to be delivered F.I.S., except for refrigeration and display cabinets hot or cold.

5.2 The Company is not liable for any claims for non fulfilment or late delivery of Goods or for any loss or damage (including consequential loss or damage) suffered by the Applicant arising from delay in delivery or a failure to deliver. The Applicant shall accept and pay for the Goods notwithstanding late delivery.

5.3 The Applicant shall upon placing its order advise the Company of the nominated delivery point and requested delivery date.

5.4 Unless otherwise agreed by the Applicant and the Company, the Company shall be entitled to deliver the Goods in one or more lots. Where delivery of the Goods is effected by way of part delivery, the Company shall be entitled to invoice the Applicant for pro rata progress payments in respect thereof.

5.5 Notwithstanding the Applicant's inability to accept delivery of the Goods, the Company shall be deemed to have delivered the Goods in accordance with these Terms of Trade.

5.6 All claims by the Applicant in relation to delivery quantities or loss or damage to the Goods must be made within 7 days of delivery of the Goods, time being of the essence. Any claims made outside this time frame will not be recognised by the Company.

6. 6.1 Unless otherwise agreed by the Company in writing, all Goods will be supplied on a cash before delivery basis.

6.2 The extension of credit to the Applicant by the Company shall be at the absolute discretion of the Company, which discretion may be varied from time to time, and where extended unless otherwise advised in writing by the Company, the Company requires cash payment in full by the last Business Day which is 30 days following the date of the Invoice. A letter signed by a director of the Company will be sufficient evidence as to the terms of credit applicable to the Applicant at any point in time.

6.3 In the event that payment for any Invoice has not been received by the Company within 30 days of Invoice, the Company may, in its discretion:

(a) immediately cease any extension of credit; and/or

(b) charge the Applicant interest on overdue amounts, such interest to be calculated daily on the balance outstanding; and/or

(c) charge to the Applicant all administration and other costs incurred by the Company in relation to collection of outstanding amounts owed by the Applicant to the Company.

6.4 The Applicant may not withhold payment or make any deductions from any amount owing without the Company's prior written consent, which consent may be withheld in its absolute discretion.

6.5 The Company will forward a statement monthly to those Applicants granted an extension of credit pursuant to clause 6.2.

(a) legal and equitable ownership of the Goods;

(b) to enter the Applicant's premises or the premises of any associated company or agent where the Goods are located) without liability for trespass or any resulting damage and retake possession of the Goods; and

(c) to keep or resell any of the Goods pursuant to clause 8.6(b).

6.6 The Applicant must, so long as the Company is entitled to the property in the Goods, store the Goods so that they are clearly identifiable as the property of the Company.

6.7 In the event that the Goods are resold by the Applicant, it will be deemed to have done so as agent for the Company and only on the following terms:

(a) on such disposal or dealing, the Applicant transfers all rights to the proceeds of that disposal or dealing to the Company absolutely;
(b) the Applicant as bailee and fiduciary of the Goods must hold the proceeds of any sale or dealing of the Goods (to the extent of any liability to the Company in respect of the Goods) in trust for the Company;
(c) the Applicant must keep separate records of any sale of the Goods and must maintain the proceeds in a separate account; and
(d) the Applicant must account to the Company for any proceeds from such Goods and must direct any purchasers of the goods to pay the proceeds to the Company.

6.8 If payment for the Goods is not made by the Applicant by the due date specified by the Company to the Applicant then the Applicant must return the Goods to the Company on demand. If the Applicant does not return the Goods to the Company within 48 hours of receipt of the demand, the Company shall be entitled to enter upon the Applicant's premises at any time to do all things necessary to recover the Goods. The Applicant shall be liable for all costs associated with the exercise by the Company of its rights under this clause which shall be repayable on demand.

7. COMPANY'S WARRANTY

7.1 The Goods distributed by the Company are guaranteed against defective workmanship and materials for a period of 12 months from the date of purchase, the Company's obligations pursuant to this express warranty being limited to the repair or replacement of the defective Goods or materials at its option and subject to the terms and conditions stated in the warranty card attached to the Goods. Glass and lamps are not included in this warranty. RCD tripping due to moisture absorption by Tubular Heating Elements is not considered a warranty fault. Hinges, rubber seals or gears acting a sacrificial component to protect motors, are wear and tear items and are not covered by warranty.

7.2 Any item that can be picked up and put into a normal vehicle, is covered by a back to base warranty. This means the end user needs to return it (freight pre-paid) to either the place where it was purchased from, or our closest appointed service agent, or back to our head office. A call out for refrigeration and other non portable equipment is covered by an on site warranty during the hours of 8am-5pm Monday to Friday only. Travel costs for on site warranty are limited to 50km from our nearest appointed service agent and are reachable by road.

7.3 Except as provided in this clause, the Company shall not be liable for any loss or damage, whether direct or indirect (including consequential losses or damage) arising out of any breach of contract by the Company or any negligence of the Company, its employees or agents.

7.4 To the extent permitted by law all implied conditions and warranties are expressly excluded.

7.5 The Company will not be liable in respect of any claims for parts damaged in transport, misused by the Applicant or its authorised parties or modified in any way without the approval of the Company.

7.6 Any repairs or replacement of defective Goods or materials pursuant to the warranty set out in this clause, must be authorised by a director of the Company prior to any action being taken. The Company reserves the right to reject a warranty claim if it is not completely satisfied with the circumstances under which such fault or defect occurred.

7.7 Nothing in these Terms of Trade shall be read or applied so as to exclude, restrict or modify or have the effect of excluding, restricting, modifying any condition warranty guarantee right or remedy implied by law (including the Trade Practices Act 1974 (Commonwealth)) which by law cannot be excluded, restricted or modified.

7.8 This warranty does not extend to cover loss of profits or damage to other equipment.

7.9 Warranty does not cover products which have been subject to misuse, neglect, unauthorised alteration, incorrect installation, power surges, accident, use of inappropriate chemicals for cleaning, flooding, fire or acts of God.

7.10 Failure to honour payments for a notice or non warranty call out by end user, will result in immediate voiding of warranty on that item.

7.11 On site warranty covers repairs on site. If customer does not permit repair on their premises, they are responsible for freight to and from site.

8. APPLICANT'S WARRANTY AND INDEMNITY

8.1 The Applicant acknowledges and warrants to the Company that as at the date of entry into a contract to purchase the Goods, the Applicant is not insolvent nor has he committed any act of bankruptcy or, being a company, knows of no circumstances which would entitle a debenture holder or unsecured creditor to appoint a receiver to petition for winding up of the Applicant or exercise any other rights over or against the Applicant's assets.

8.2 Without prejudice to any other rights the Company may have against the Applicant, the Applicant shall indemnify the Company for and save it harmless from any loss, damage or expense incurred by the Applicant as a result of the Applicant:
(a) cancelling any order (or part thereof) for the Goods; or
(b) breaching these Terms of Trade.

9. DEFAULT

Should the Applicant fail to make payment for any Goods supplied by the Company on the dates due for payment or commit a breach of any term of the sale or, being a natural person, commit an act of bankruptcy or, being a corporation, an act or omission enabling the appointment of an administrator, scheme manager, trustee, official manager, receiver, receiver and manager, liquidator or any other person authorised to enter into possession or assume control of any property of the Applicant pursuant to a mortgage or other security, then:

(a) the right of the Applicant to sell the Goods in the ordinary course of business or otherwise immediately terminates without the need for the Company to provide written confirmation; and
(b) the Company may without prejudice to any other rights it may have, do any or all of the following:
  (i) immediately withdraw any credit facilities which may have been extended to the Applicant and require immediate payment of all moneys accrued or owing to the Company.
  (ii) withhold any further deliveries of Goods or performance of service required under the contract;
  (iii) in respect of Goods already delivered, enter onto the Applicant's premises to recover and resell same for its own benefits;
  (iv) suspend and/or terminate performance of any other contracts which the Company has with the Applicant.

10. GOODS RETURNED

10.1 The Applicant shall inspect the Goods immediately upon delivery and if the Goods are damaged or not otherwise in conformity with the contract relating to their supply shall give written notice to the Company of the details in respect thereof within 7 days of the date of delivery.

10.2 Subject to clause 10.3, any Goods the subject of a notice under clause 10.1 shall be left in the state and condition in which they were delivered until such time as the Company or its duly authorised agent has inspected the Goods, such inspection to be carried out within a reasonable time after notification by the Applicant. If the Goods are not so left in the state and condition in which they were delivered, the Applicant shall be deemed to have accepted the Goods and shall pay the purchase price for the Goods to the Company.

10.3 Upon receipt of a notice under clause 10.1, the Company will advise a return authorisation number and the mode of transport (clause 10.2) acceptable to the Company. Any Goods returned to the Company will be at the Applicant's entire risk as to loss or damage. In relation to Goods returned to the Company, the Applicant undertakes to follow the Company's instructions, prepay the freight and clearly mark the freight with the return authorisation number advised by the Company.

10.4 Deliveries not complying with clause 10.3 will not be accepted by the Company.

10.5 Subject to clauses 10.1 and 10.3, valid claims for incorrectly sent Goods will be credited in full. A 20% restocking fee will apply to all Goods returned against orders correctly executed. The Company reserves the right to charge for any cost incurred in such execution.

10.6 Subject to clause 10.1 acceptance of the Goods shall be deemed for all purposes to have taken place when delivery has occurred.

10.7 In the case of a non-standard manufacture, where a "Confirmation of Non-standard Items" form has been signed, and where orders have been correctly executed, no returns will be accepted.

10.8 The Company will charge an additional restocking fee for goods returned out of the original packing.

11. DISPUTES

11.1 Any disputes between the parties arising from the performance of the provisions of these Terms of Trade must be settled through friendly consultation by the parties. All disputes arising in respect of these Terms of Trade which are not resolved within 30 days of first arising will be finally settled under the Rules of Conciliation and Arbitration of the International Chamber of Commerce by a single arbitrator appointed in accordance with the said Rules. The place of arbitration will be Sydney New South Wales. The procedural law applicable to the arbitration will be that of New South Wales. The decision of the arbitration is final and binding upon both parties.

11.2 During the period in which the dispute is being resolved, the parties must continue to perform all of the provisions of these Terms of Trade which are not under dispute and which are able to be performed by the parties.

12. SEVERABILITY

All provisions contained in these Terms of Trade shall be construed so as not to be invalid, illegal or unenforceable in any respect but if any such provision on its true interpretation is illegal, invalid or unenforceable that provision may, at the option of the parties, be read down to such extent as may be necessary to ensure that it is not illegal, invalid or unenforceable and as may be reasonable in all circumstances so as to give it a valid operation of the partial character. In the event that any such provision or part thereof cannot be so read down, such provision shall be deemed to be void and severable and the remaining provisions thereof shall not in any way be affected or impaired thereby.

13. FORCE MAJEURE

The Company shall not be liable for non-fulfilment or late delivery should actual delivery of the Goods or any parts be delayed in consequence of unforeseen events such as strikes, unforeseen breakdown, of machinery (save where caused by improper maintenance or operation by untrained personnel), suspension of electricity or other relevant power supply, riots, war, robbery, civil commotion, adverse non foreseeable weather conditions, disaster caused by fire and/or water, action of government or port authority, delay of vessel, rail-road embargoes, inability to obtain transportation facilities or due to a failure of an original equipment manufacturer to supply components by the due date.

14. APPLICABLE LAW

These Terms of Trade shall be governed by and construed in accordance with the laws in force in the State of New South Wales, Australia and the parties submit to the non-exclusive jurisdiction of the Courts of that State.

15. DEFINITIONS

The following words have the following meaning:

"Applicant" means the person or entity purchasing the Goods from the Company.

"Business day" means a day other than a Saturday or Sunday when trading banks in Sydney are open for general banking business.

"Company" means INTERNATIONAL CATERING EQUIPMENT Pty Ltd ABN 29 079 648 918.

"F.I.S." means free into store as referred to in the Incoterms.

"F.O.B." means free on board as referred to in the Incoterms.

"Goods" means all Goods ordered by the Applicant from time to time and supplied by the Company under these Terms of Trade and includes any services forming part of the supply of Goods.

"GST" means goods and services tax or similar value added tax levied or imposed in Australia pursuant to the GST law or otherwise on a supply.

"GST Act" means A New Tax System (Goods and Services Tax) Act 1999 (Commonwealth).

"GST Law" has the same meaning as in the GST Act.

"Incoterms" means the International Rules for the Interpretation of Trade Terms, ICC Publishing S.A., Paris 2000 edition.

"Invoice" means an invoice sent by the Company to the Applicant for payment of the Goods supplied to the Applicant at the request of the Applicant.

"Terms of Trade" means the terms and conditions of trade as set out above.



GASTRONORM SIZES	UNITS
GN1/9 : 108 x 176 mm GN1/6 : 176 x 162 mm GN1/4 : 265 x 163 mm GN1/3 : 325 x 176 mm GN1/2 : 325 x 265 mm GN2/3 : 354 x 325 mm GN1/1 : 530 x 325 mm GN2/1 : 650 x 530 mm	1 HP = 0.7457 kW 1 kW = 1.341 HP 1 Quart = 0.946352 Lt 1 Litre = 1.056689 Qt

CONVERSION TABLES

LENGTHS		
CENTIMETRES	MILLIMETRES	INCHES
1	= 10	= 0.394
2	= 20	= 0.737
3	= 30	= 1.181
4	= 40	= 1.575
5	= 50	= 1.969
6	= 60	= 2.362
7	= 70	= 2.756
8	= 80	= 3.150
9	= 90	= 3.543
10	= 100	= 3.937
11	= 110	= 4.331
12	= 120	= 4.721

TEMPERATURES	
˚F	˚C
225	105
250	120
275	130
300	150
325	165
350	180
375	190
400	200
425	220
450	230
475	245

MEASUREMENTS	
16 tablespoons	= 1 cup
12 tablespoons	= 3/4 cup
10 tablespoons	= 2/3 cup
8 tablespoons	= 1/2 cup
6 tablespoons	= 3/8 cup
5 tablespoons	= 1/3 cup
4 tablespoons	= 1/4 cup
2 tablespoons	= 1/8 cup
2 tablespoons + 2 teaspoons	= 1/6 cup
1 tablespoon	= 1/16 cup
2 cups	= 1 pint
2 pints	= 1 quart
3 teaspoons	= 1 tablespoon
48 teaspoons	= 1 cup
250ml	= 1 cup
180ml	= 3/4 cup
120ml	= 1/2 cup
60ml	= 1/4 cup
15ml	= 1 tablespoon
5ml	= 1 teaspoon

WEIGHTS		
1 g	= 1,000 mg	= 0.0353 oz
1 kg	= 1,000 g	= 2.2046 lb
1 t	= 1,000 kg	= 0.9842 ton
1 oz	= 437.5 grains	= 28.35 g
1 lb	= 16 oz	= 0.4536 kg
1 ton	= 20 cwt	= 1.1016t

DISCLAIMER
Whilst every effort is made to bring to you accurate pictures and measurements, errors can and do occur, as well as suppliers can change specification/s. For any product that fabrication is required we would suggest that you contact our offices and confirm dimensions as being correct with anyone of the sales advisors.

Exclusive distributor of :

adler professional dishwashers

ANVIL AIRE

ANVIL APEX

ANVIL ALTO

ANVIL AXIS

Hamilton Beach COMMERCIAL

NEMCO FOOD EQUIPMENT

EVERLASTING REFRIGERAZIONE PROFESSIONALE DAL 1996

INOMAK

MECNOSUD

ORVED

RHENINGHAUS

saltas

TECNOCAVO REFRIGERATION

MONOLITH

International Catering Equipment Pty Ltd

P.O. Box 2225 – Rose Bay North NSW 2030 – Sydney Australia – Ph: (612) 8372 0800 – Fax: (612) 8338 1020 – info@internationalcatering.com.au