UFI1140G

Double Door Upright Fridge Glass

- 1432L
- Stainless steel AISI 304 18/8-10 interior and exterior
- Self closing doors
- Internal led light
- 32°C ambient
- Embedded controller
- Rounded internal corners for easy cleaning
- R290 gas
- On castors
- 22 x 2/1 x 65mm deep GN pans per door capacity
- Supplied with 5 shelves per door
- Internal usable space: 550 x 660 x 1250mm per door
- Operating temp -2°C to 8°C
- Glass door is not reversible
- Manufacture code: CEP2144/GL/AUS

Shown on legs,
supplied on castors

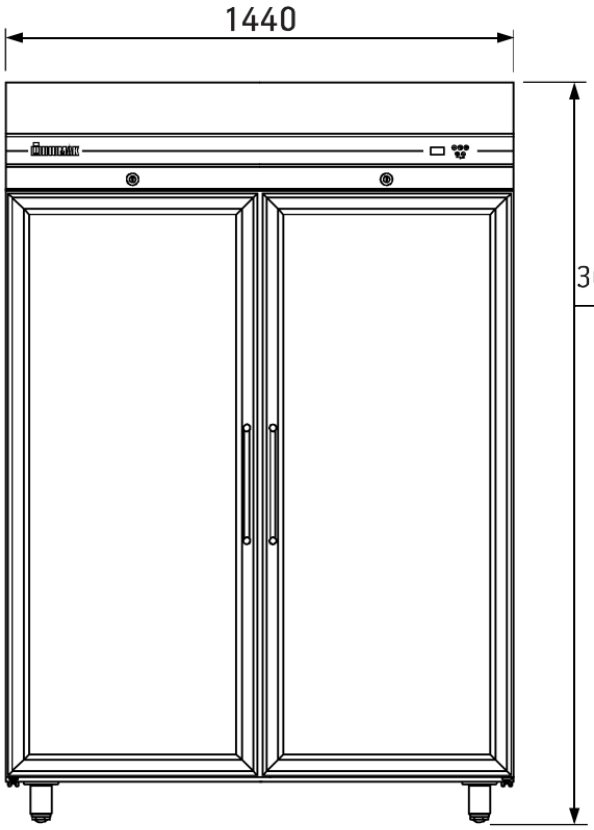

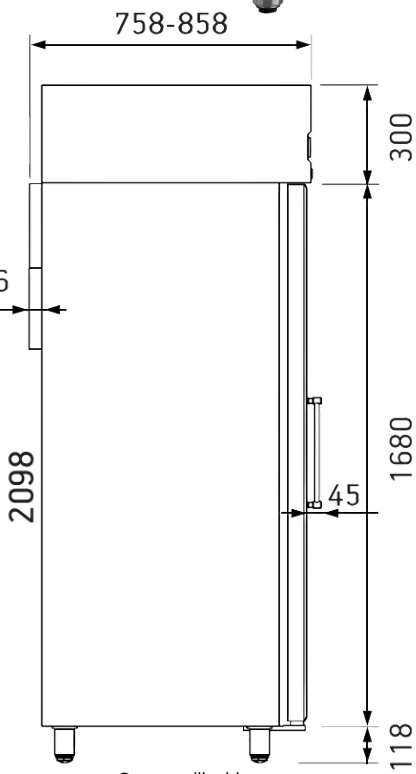

Castors will add
30mm to the height
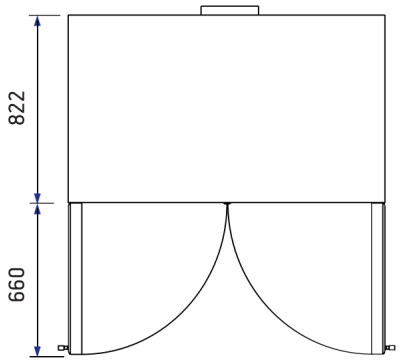
<u>Technicial Specifications</u>
Power: 0.79kW
Voltage: 240V
Dimensions: 1440 x 910 x 2115mm
Weight: 258kg
Origin: Greece