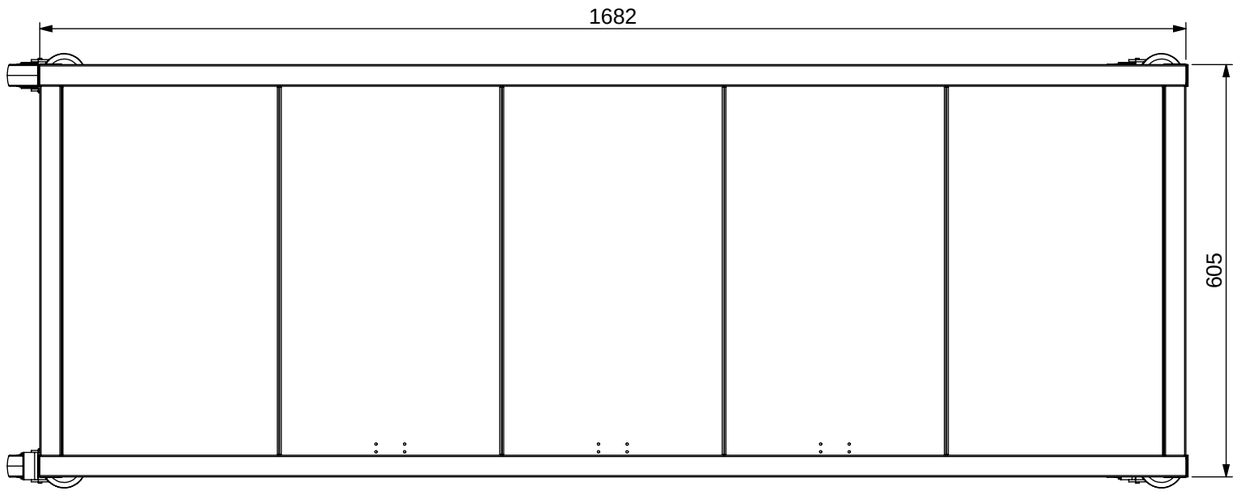

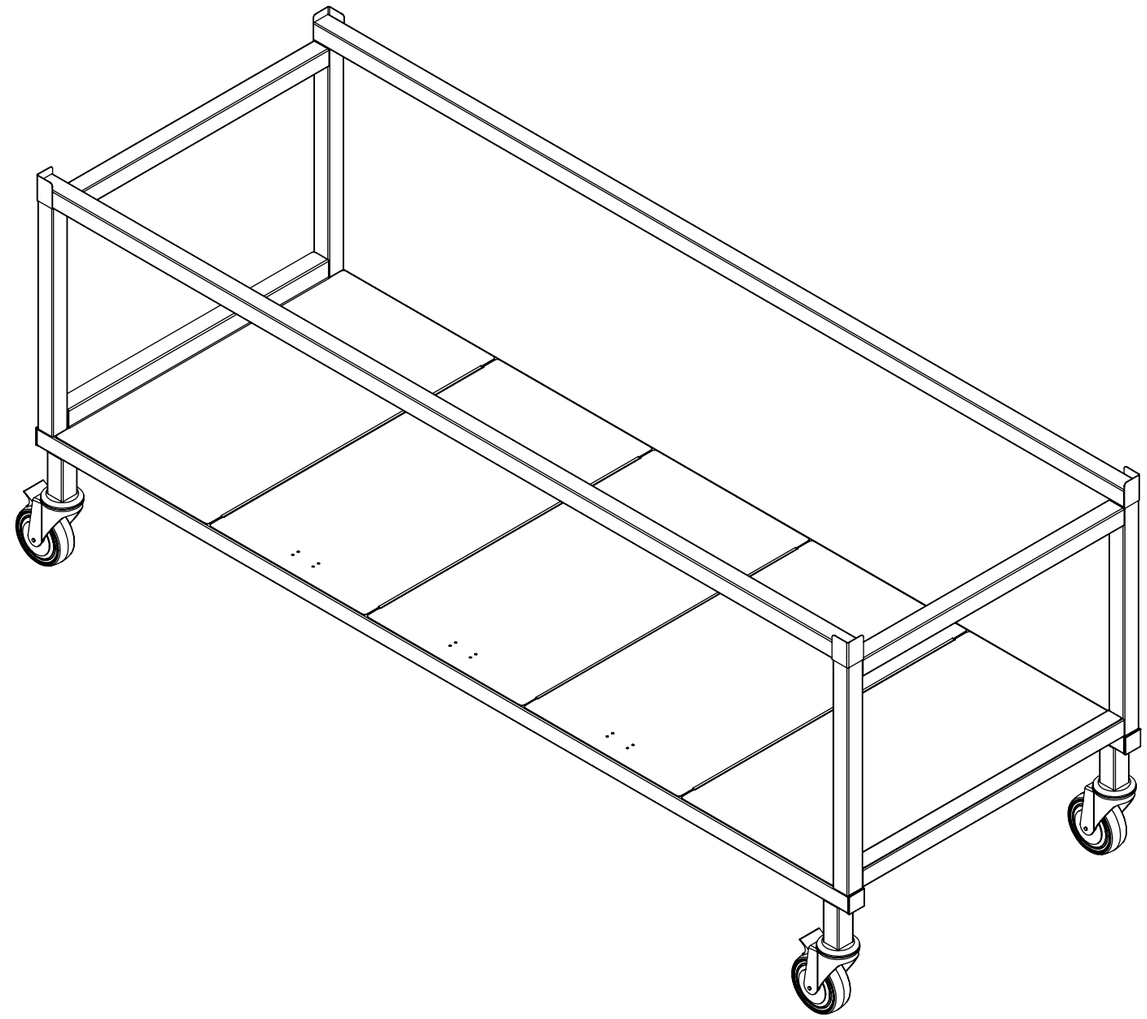

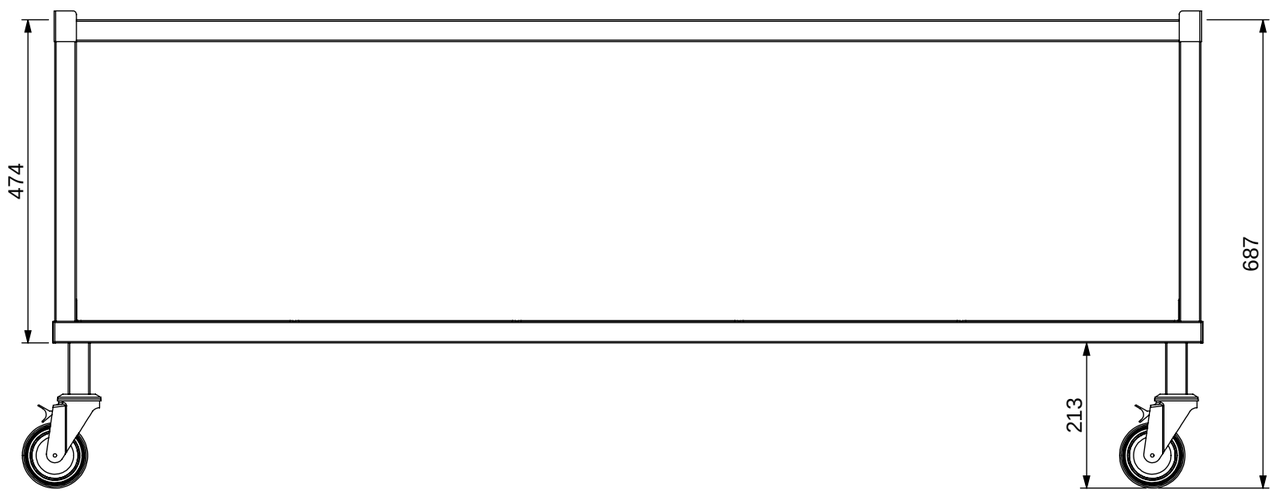

Press:	Programmed by:	Date:	Punch:	Die:

STODDART
METAL FABRICATORS
TOM STODDART Pty Ltd ACN 009 690 251
215 Jackson Rd Sunnybank Hills Qld 4109
PO Box 420 Sunnybank Qld 4109
Phone (617) 3345 5011 Fax (617) 3344 1000
Email sunnybank@stoddart.com.au
Quality in stainless steel

PRODUCT: 5 Bay Trolley

	NAME	SIGNATURE	DATE
DRAWN	N Wooler		6/03/2006
APPV'D			

UNLESS OTHERWISE SPECIFIED:
DIMENSIONS ARE IN MILLIMETERS

MATERIAL:
THICKNESS:
FINISH:

PART No: **WTRA25-A001**

DESCRIPTION: 5 Bay Trolley

DWG No: WTRA25-D001

REVISION A

DO NOT SCALE DRAWING

This drawing remains the property of Tom Stoddart Pty Ltd & cannot be reproduced without prior permission.

A3

Sheet 1 of 10

F:\08_Food Service Equipment\03_Engineering - FSE\01_Stoddart Standard Products\Woodson\WTRx2x Food Display Trolleys and Panels\01_Solidworks\WTRA25\